Online ISSN: 2249-4626
Print ISSN: 0975-5896

Global Journal of Science Frontier Research: A

Physics and Space Science

Highlights

- Ether Elasticity Theory
- Genesis of the Planet Earth
- Unification of Physics Theories
- Theory of Shubnikov-de Haas

Discovering Thoughts, Inventing Future

VOLUME 14 ISSUE 6 VERSION 1.0

© 2001-2014 by Global Journal of Science Frontier Research , USA

Global Journal of Science Frontier Research: A
Physics & Space Science

Global Journal of Science Frontier Research: A
Physics & Space Science
Volume 14 Issue 6 (Ver. 1.0)

Open Association of Research Society

© Global Journal of Science Frontier Research. 2014.

All rights reserved.

This is a special issue published in version 1.0 of "Global Journal of Science Frontier Research." By Global Journals Inc.

All articles are open access articles distributed under "Global Journal of Science Frontier Research"

Reading License, which permits restricted use. Entire contents are copyright by of "Global Journal of Science Frontier Research" unless otherwise noted on specific articles.

No part of this publication may be reproduced or transmitted in any form or by any means, electronic or mechanical, including photocopy, recording, or any information storage and retrieval system, without written permission.

The opinions and statements made in this book are those of the authors concerned. Ultraculture has not verified and neither confirms nor denies any of the foregoing and no warranty or fitness is implied.

Engage with the contents herein at your own risk.

The use of this journal, and the terms and conditions for our providing information, is governed by our Disclaimer, Terms and Conditions and Privacy Policy given on our website http://globaljournals.us/terms-and-condition/menu-id-1463/

By referring / using / reading / any type of association / referencing this journal, this signifies and you acknowledge that you have read them and that you accept and will be bound by the terms thereof.

All information, journals, this journal, activities undertaken, materials, services and our website, terms and conditions, privacy policy, and this journal is subject to change anytime without any prior notice.

Incorporation No.: 0423089
License No.: 42125/022010/1186
Registration No.: 430374
Import-Export Code: 1109007027
Employer Identification Number (EIN):
USA Tax ID: 98-0673427

Global Journals Inc.

*(A Delaware USA Incorporation with "Good Standing"; **Reg. Number: 0423089**)*

Sponsors: Open Association of Research Society
Open Scientific Standards

Publisher's Headquarters office

Global Journals Headquarters
301st Edgewater Place Suite, 100 Edgewater Dr.-Pl,
Wakefield MASSACHUSETTS, Pin: 01880,
United States of America
USA Toll Free: +001-888-839-7392
USA Toll Free Fax: +001-888-839-7392

Offset Typesetting

Global Journals Incorporated
2nd, Lansdowne, Lansdowne Rd., Croydon-Surrey,
Pin: CR9 2ER, United Kingdom

Packaging & Continental Dispatching

Global Journals
E-3130 Sudama Nagar, Near Gopur Square,
Indore, M.P., Pin:452009, India

Find a correspondence nodal officer near you

To find nodal officer of your country, please email us at *local@globaljournals.org*

eContacts

Press Inquiries: *press@globaljournals.org*
Investor Inquiries: *investors@globaljournals.org*
Technical Support: *technology@globaljournals.org*
Media & Releases: *media@globaljournals.org*

Pricing (Including by Air Parcel Charges):

For Authors:
22 USD (B/W) & 50 USD (Color)
Yearly Subscription (Personal & Institutional):
200 USD (B/W) & 250 USD (Color)

Integrated Editorial Board
(Computer Science, Engineering, Medical, Management, Natural Science, Social Science)

John A. Hamilton,"Drew" Jr.,
Ph.D., Professor, Management
Computer Science and Software Engineering
Director, Information Assurance Laboratory
Auburn University

Dr. Henry Hexmoor
IEEE senior member since 2004
Ph.D. Computer Science, University at Buffalo
Department of Computer Science
Southern Illinois University at Carbondale

Dr. Osman Balci, Professor
Department of Computer Science
Virginia Tech, Virginia University
Ph.D.and M.S.Syracuse University, Syracuse, New York
M.S. and B.S. Bogazici University, Istanbul, Turkey

Yogita Bajpai
M.Sc. (Computer Science), FICCT
U.S.A.Email:
yogita@computerresearch.org

Dr. T. David A. Forbes
Associate Professor and Range Nutritionist
Ph.D. Edinburgh University - Animal Nutrition
M.S. Aberdeen University - Animal Nutrition
B.A. University of Dublin- Zoology

Dr. Wenying Feng
Professor, Department of Computing & Information Systems
Department of Mathematics
Trent University, Peterborough,
ON Canada K9J 7B8

Dr. Thomas Wischgoll
Computer Science and Engineering,
Wright State University, Dayton, Ohio
B.S., M.S., Ph.D.
(University of Kaiserslautern)

Dr. Abdurrahman Arslanyilmaz
Computer Science & Information Systems Department
Youngstown State University
Ph.D., Texas A&M University
University of Missouri, Columbia
Gazi University, Turkey

Dr. Xiaohong He
Professor of International Business
University of Quinnipiac
BS, Jilin Institute of Technology; MA, MS, PhD,. (University of Texas-Dallas)

Burcin Becerik-Gerber
University of Southern California
Ph.D. in Civil Engineering
DDes from Harvard University
M.S. from University of California, Berkeley & Istanbul University

Dr. Bart Lambrecht
Director of Research in Accounting and FinanceProfessor of Finance
Lancaster University Management School
BA (Antwerp); MPhil, MA, PhD (Cambridge)

Dr. Carlos García Pont
Associate Professor of Marketing
IESE Business School, University of Navarra
Doctor of Philosophy (Management), Massachusetts Institute of Technology (MIT)
Master in Business Administration, IESE, University of Navarra
Degree in Industrial Engineering, Universitat Politècnica de Catalunya

Dr. Fotini Labropulu
Mathematics - Luther College
University of ReginaPh.D., M.Sc. in Mathematics
B.A. (Honors) in Mathematics
University of Windso

Dr. Lynn Lim
Reader in Business and Marketing
Roehampton University, London
BCom, PGDip, MBA (Distinction), PhD, FHEA

Dr. Mihaly Mezei
ASSOCIATE PROFESSOR
Department of Structural and Chemical Biology, Mount Sinai School of Medical Center
Ph.D., Etvs Lornd University
Postdoctoral Training,
New York University

Dr. Söhnke M. Bartram
Department of Accounting and FinanceLancaster University Management SchoolPh.D. (WHU Koblenz)
MBA/BBA (University of Saarbrücken)

Dr. Miguel Angel Ariño
Professor of Decision Sciences
IESE Business School
Barcelona, Spain (Universidad de Navarra)
CEIBS (China Europe International Business School).
Beijing, Shanghai and Shenzhen
Ph.D. in Mathematics
University of Barcelona
BA in Mathematics (Licenciatura)
University of Barcelona

Philip G. Moscoso
Technology and Operations Management
IESE Business School, University of Navarra
Ph.D in Industrial Engineering and Management, ETH Zurich
M.Sc. in Chemical Engineering, ETH Zurich

Dr. Sanjay Dixit, M.D.
Director, EP Laboratories, Philadelphia VA Medical Center
Cardiovascular Medicine - Cardiac Arrhythmia
Univ of Penn School of Medicine

Dr. Han-Xiang Deng
MD., Ph.D
Associate Professor and Research Department Division of Neuromuscular Medicine
Davee Department of Neurology and Clinical NeuroscienceNorthwestern University Feinberg School of Medicine

Dr. Pina C. Sanelli
Associate Professor of Public Health
Weill Cornell Medical College
Associate Attending Radiologist
NewYork-Presbyterian Hospital
MRI, MRA, CT, and CTA
Neuroradiology and Diagnostic Radiology
M.D., State University of New York at Buffalo,School of Medicine and Biomedical Sciences

Dr. Roberto Sanchez
Associate Professor
Department of Structural and Chemical Biology
Mount Sinai School of Medicine
Ph.D., The Rockefeller University

Dr. Wen-Yih Sun
Professor of Earth and Atmospheric SciencesPurdue University Director National Center for Typhoon and Flooding Research, Taiwan University Chair Professor Department of Atmospheric Sciences, National Central University, Chung-Li, TaiwanUniversity Chair Professor Institute of Environmental Engineering, National Chiao Tung University, Hsin-chu, Taiwan.Ph.D., MS The University of Chicago, Geophysical Sciences
BS National Taiwan University, Atmospheric Sciences
Associate Professor of Radiology

Dr. Michael R. Rudnick
M.D., FACP
Associate Professor of Medicine
Chief, Renal Electrolyte and Hypertension Division (PMC)
Penn Medicine, University of Pennsylvania
Presbyterian Medical Center, Philadelphia
Nephrology and Internal Medicine
Certified by the American Board of Internal Medicine

Dr. Bassey Benjamin Esu
B.Sc. Marketing; MBA Marketing; Ph.D Marketing
Lecturer, Department of Marketing, University of Calabar
Tourism Consultant, Cross River State Tourism Development Department
Co-ordinator , Sustainable Tourism Initiative, Calabar, Nigeria

Dr. Aziz M. Barbar, Ph.D.
IEEE Senior Member
Chairperson, Department of Computer Science
AUST - American University of Science & Technology
Alfred Naccash Avenue – Ashrafieh

President Editor (HON.)

Dr. George Perry, (Neuroscientist)
Dean and Professor, College of Sciences
Denham Harman Research Award (American Aging Association)
ISI Highly Cited Researcher, Iberoamerican Molecular Biology Organization
AAAS Fellow, Correspondent Member of Spanish Royal Academy of Sciences
University of Texas at San Antonio
Postdoctoral Fellow (Department of Cell Biology)
Baylor College of Medicine
Houston, Texas, United States

Chief Author (HON.)

Dr. R.K. Dixit
M.Sc., Ph.D., FICCT
Chief Author, India
Email: authorind@computerresearch.org

Dean & Editor-in-Chief (HON.)

Vivek Dubey(HON.)
MS (Industrial Engineering),
MS (Mechanical Engineering)
University of Wisconsin, FICCT
Editor-in-Chief, USA
editorusa@computerresearch.org

Sangita Dixit
M.Sc., FICCT
Dean & Chancellor (Asia Pacific)
deanind@computerresearch.org

Suyash Dixit
(B.E., Computer Science Engineering), FICCTT
President, Web Administration and
Development , CEO at IOSRD
COO at GAOR & OSS

Er. Suyog Dixit
(M. Tech), BE (HONS. in CSE), FICCT
SAP Certified Consultant
CEO at IOSRD, GAOR & OSS
Technical Dean, Global Journals Inc. (US)
Website: www.suyogdixit.com
Email:suyog@suyogdixit.com

Pritesh Rajvaidya
(MS) Computer Science Department
California State University
BE (Computer Science), FICCT
Technical Dean, USA
Email: pritesh@computerresearch.org

Luis Galárraga
J!Research Project Leader
Saarbrücken, Germany

Contents of the Issue

i. Copyright Notice
ii. Editorial Board Members
iii. Chief Author and Dean
iv. Contents of the Issue
v. Research and Review Papers

1. Unification of Physics Theories by the Ether Elasticity Theory. *1-11*
2. Reasons for Removal of the Moon. *13-18*
3. Theory of Shubnikov-De Haas and Quantum Hall Oscillations in Graphene under Bias and Gate Voltages. *19-32*
4. Genesis of the Planet Earth. *33-39*

vi. Fellows and Auxiliary Memberships
vii. Process of Submission of Research Paper
viii. Preferred Author Guidelines
ix. Index

Global Journal of Science Frontier Research: A
Physics and Space Science
Volume 14 Issue 6 Version 1.0 Year 2014
Type : Double Blind Peer Reviewed International Research Journal
Publisher: Global Journals Inc. (USA)
Online ISSN: 2249-4626 & Print ISSN: 0975-5896

Unification of Physics Theories by the Ether Elasticity Theory

By David Zareski

Israel Aerospace Industries, Israel

Abstract- Our previous publications lead to the fact that the ether elasticity theory in which the ether is shown to be an elastic medium governed by a Navier-Stokes-Durand equation (NSDE), unifies physics theories. The great lines of this unification are the following. Electromagnetism, is the case where the ether is submitted to only densities C of couples of forces associated to the electric charges that creates the field ξ of the displacements of the points of the ether from which one deduces the Maxwell equations and the electromagnetic forces. Electromagnetism is generalized to the case where ξ is also associated to $Par(m,e)s$ (particles of mass m and electric charge e) submitted to incident fields, by the fact that the Lagrange-Einstein function L_G of a such a $Par(m,e)$ yields not only the motion equation, but also ϕ, defined by $\hbar\, d\phi/dt = L_G$, which is the phase of a wave ξ associated to $Par(m,e)s$. This ξ is a solution of a generalized NSDE. A specific sum $\hat{\xi}$ of waves ξ forms a globule that moves like the $\mathrm{Par(m,e)}$ and contains all its parameters; reciprocally, a wave ξ is a sum of globules $\hat{\xi}$, i.e., of $Par(m,e)s$.

Keywords: ether theory as unifying; moving particle as a globule in the ether; Newton approximation; Lorentz transformation of static potential; globule motion creating a Lienard-Wiechert tensor; interactive forces as interactions of ether deformations.

GJSFR-A Classification : FOR Code: 020399

UNIFICATIONOFPHYSICSTHEORIESBYTHEETHERELASTICITYTHEORY

Strictly as per the compliance and regulations of :

© 2014. David Zareski. This is a research/review paper, distributed under the terms of the Creative Commons Attribution-Noncommercial 3.0 Unported License http://creativecommons.org/licenses/by-nc/3.0/), permitting all non commercial use, distribution, and reproduction in any medium, provided the original work is properly cited.

Unification of Physics Theories by the Ether Elasticity Theory

David Zareski

Abstract- Our previous publications lead to the fact that the ether elasticity theory in which the ether is shown to be an elastic medium governed by a Navier-Stokes-Durand equation (NSDE), unifies physics theories. The great lines of this unification are the following. Electromagnetism, is the case where the ether is submitted to only densities C of couples of forces associated to the electric charges that creates the field ξ of the displacements of the points of the ether from which one deduces the Maxwell equations and the electromagnetic forces. Electromagnetism is generalized to the case where ξ is also associated to $Par(m,e)s$ (particles of mass m and electric charge e) submitted to incident fields, by the fact that the Lagrange-Einstein function L_G of a such a $Par(m,e)$ yields not only the motion equation, but also ϕ, defined by $\hbar\, d\phi/dt = L_G$, which is the phase of a wave ξ associated to $Par(m,e)s$. This ξ is a solution of a generalized NSDE. A specific sum $\hat{\xi}$ of waves ξ forms a globule that moves like the $\mathrm{Par(m,e)}$ and contains all its parameters; reciprocally, a wave ξ is a sum of globules $\hat{\xi}$, i.e., of $Par(m,e)s$. These sums are Fourier transforms, and we call this property, "wave-particle reciprocity". It appears that the fields are also elastic changes in the ether. In the Newton-Maxwell theory, the electrical repulsion between two massive electrically charged particles of same sign are always greater than their Newtonian attraction. But, by taking into account the General Relativity and the ether theory, we show that their mutual gravitational attraction surpasses their electrical repulsion when they are sufficiently close one to the other. This phenomena plays the role of the "strong nuclear interaction". The Schrödinger equation ensues from axioms inspired from the de Broglie plane wave, therefore this equation is axiomatic, even though it yields very important results. Therefore one may think that the quantum mechanics may be generalized by a theory based on physical parameters and on general relativity, and not only on axioms. Indeed, we show in particular, that Schrodinger's equation is a particular case of the ether elasticity theory compatible with the general relativity, in particular the quantum states are shown to be due to interferences of waves ξ that compose a $\hat{\xi}$ in an atom, i.e. where $\hat{\xi}$ describes a closed trajectory. Now in a linear motion, a $Par(m,e)$, i.e., a $\hat{\xi}(m,e)$, creates a Lienard-Wiechert covariant potential tensor that yields the magnetic field H which, in the *ether elasticity theory, is the velocity* $\partial_t \xi$ *of the ether points*. It appears that at a fixed observatory point near, at a given instant, to the moving electron, i.e., to the moving $\hat{\xi}(m,e)$, the velocity of the ether is of the same form as the velocity of a point of a rotating solid.

This phenomenon is the electron spin which, as we show, in a quantum state of an atom, can take only quantized values. Einstein's tensor $g_{\mu\nu}$ is usually considered as representing only the gravitational field . But the Einstein equations that defines $g_{\mu\nu}$ are pure mathematical reasoning related only to covariant derivatives. Therefore one can suppose that this tensor is more general than defining only the gravitational field and can define also other fields as, e.g., the EM field. We show that it is really the case, indeed, the fact that the electrostatic potential of force $A_{4,S}$, (S=static), created by an immobile electric charge q_0, is of the same form as the Newton potential of force $G_{4,S}$ created by an immobile $Par(m_0,0)$ implies that $A_{4,S}$ is a particular $G_{4,S}$. This is generalized by the fact, that the EM Lienard-Wiechert potential tensor A_μ created at a point by a moving e is of the same form as the Newton approximation, (NA), G_μ of $g_{\mu\nu}$ created by a moving m_0.

Résumé- Nos publications antérieures conduisent a ce que la théorie de l'éther montré être un milieu élastique régis par l'équation de Navier-Stokes-Durand, (NSDE), unifie des théories de la physique. Les grandes lignes de cette unification sont les suivantes. L'électromagnétisme est le cas ou l'éther est soumis seulement a des densités C de couples de force associées aux charges électriques qui créent le champ ξ des déplacements des points de l'éther desquelles on déduit les équations de Maxwell et les forces électrodynamiques. L'électromagnétisme est ensuite généralisée au cas ou ξ est aussi associé aux $Par(m,e)s$ (particules de masse m et de charge électrique e) soumises a des champs incidents, par le fait que la fonction the Lagrange-Einstein L_G d'une telle $Par(m,e)$ produit non seulement l'équation du mouvement, mais aussi ϕ, défini par $\hbar\, d\phi/dt = L_G$, qui est la phase d'une onde ξ associée a des $\mathrm{Par(m,e)}$. Cette ξ est solution d'une NSDE généralisée. Une somme spécifique $\hat{\xi}$ d'ondes ξ forme un globule qui se déplace comme la $Par(m,e)$ et contient tous ses paramètres; réciproquement, une onde ξ est une somme de

Author: "I.A.I, Israel Aerospace Industries" Yehud Israel, University Paul Sabatier of Toulouse, France. e-mail: zareski@inter.net.il

© 2014 Global Journals Inc. (US)

globules $\hat{\xi}$, i.e., de $Par(m,e)s$. Ces sommes sont des transformations de Fourier, et nous appelons cette propriété, "onde-particule réciprocité". Il apparaît que les champs sont aussi des changements élastiques de l'éther. Dans la théorie de Newton-Maxwell, la répulsion électrique entre deux particules massives et électriquement chargées de même signe est toujours plus grande que leur attraction Newtonienne. Mais, prenant en ligne de compte la Relativité Générale et la théorie de l'éther, nous montrons que leur attraction mutuelle gravitationnelle surpasse leur répulsion électrique lorsqu'ils sont suffisamment proche l'une de l'autre. Ce phénomène est la cause de " l'interaction nucléaire forte". L'équation de Schrödinger est basée sur des axiomes inspirés de l'onde plane de de Broglie, par conséquent cette équation est axiomatique, même si elle donne des résultats très importants. On peut donc penser que la mécanique quantique peut être généralisée par une théorie basée sur des paramètres physiques et sur la relativité générale, et non sur seulement sur des axiomes. En effet, nous montrons en particulier que l'équation de Schrödinger est un cas particulier de la théorie de l'élasticité de l'éther compatible avec la relativité générale, en particulier, les états quantiques sont montrés être dus a de interférences d'ondes ξ qui composent le globule $\hat{\xi}$ dans un atome, i.e. $\hat{\xi}$ décrit une trajectoire fermée. Or dans son mouvement linéaire, une $Par(m,e)$, i.e., un $\hat{\xi}(m,e)$, crée un potentiel tenseur de Lienard-Wiechert d'ou on déduit le champ magnétique H qui, dans *la théorie de élasticité de l'éther, est la vitesse* $\partial_t \xi$ *des points de l'éther*. Il apparait qu'a un point fixe d'observation proche, a l'instant donné, de l'électron mobile, i.e., du globule $\hat{\xi}(m,e)$ mobile, la vitesse de l'éther est de la même forme que la vitesse d'un point d'un solide en rotation. Ce phénomène est le spin de l'électron qui, comme nous le montrons, dans un état quantique d'un atome, ne peut prendre que des valeurs quantiques. Le tenseur $g_{\mu\nu}$ d'Einstein est généralement considéré comme représentant seulement le champ gravitationnel. Mais les équations d'Einstein qui définissent les $g_{\mu\nu}$ sont de purs raisonnement mathématiques n'ayant rapports qu'avec seulement des dérivées covariantes. Par conséquent, on peut supposer que ce tenseur est plus général que de définir seulement le champ gravitationnel et peut donc définir aussi d'autres champs comme, e.g., le champ électromagnétique. Nous montrons qu'il en est ainsi réellement, en effet, le potentiel électrostatique $A_{4,S}$, (S=statique), crée par une charge électrique q_0, immobile est de la même forme que le potentiel de force de Newton $G_{4,S}$ crée une $Par(m_0,0)$ immobile, implique que $A_{4,S}$ est un $G_{4,S}$ particulier. Ceci est généralisé par le fait que le tenseur de potentiel électromagnétique A_μ de Lienard-Wiechert créé a un point par une e mobile est de la même forme que l'approximation de Newton,(NA), G_μ de $g_{\mu\nu}$ crée par une m_0 mobile.

Keywords: ether theory as unifying; moving particle as a globule in the ether; Newton approximation; Lorentz transformation of static potential; globule motion creating a Lienard-Wiechert tensor; interactive forces as interactions of ether deformations.

I. Introduction

- *Einstein wrote in Ref. 1:*

"The introduction of the field as an elementary concept gave rise to an inconsistency of the theory as a whole. Maxwell's theory, although adequately describing the behavior of electrically charged particles in their interaction with one another, does not explain the behavior of electrical densities, that is, it does not provide a theory of the particles themselves. They must therefore be treated as mass points on the basis of the old theory. The combination of the idea of a continuous field with the conception of material points discontinuous in space appears inconsistent. A consistent field theory requires continuity of all elements of the theory not only in time but also in space and in all points of space. Hence, the material particle has no place as a fundamental concept in a field theory The particle can only appear as a limited region in space in which the field strength of the energy density is particularly high. Thus, even apart from the fact that gravitation is not included, Maxwell's electrodynamics cannot be considered a complete theory."

- *Maxwell and Einstein presumed the existence of an ether, in particular Maxwell wrote in Art. 866 of Ref. 2:*

  "Hence all these theories lead to the conception of a medium in which the propagation takes place, and if we admit this medium as an hypothesis, I think it ought to occupy a prominent place in our investigations.".

- *and Einstein in Ref. 3:*

"Recapitulating, we may say that according to the general theory of relativity space is endowed with physical qualities; in this sense, therefore, there exists an ether. According to the general theory of relativity space without ether is unthinkable; for in such space there not only would be no propagation of light, but also no possibility of existence for standards of space and time (measuring-rods and clocks), nor therefore any space-time intervals in the physical sense.".

Physicists and in particular Einstein tried to unify physics without success. In my opinion this is due to the fact that that they did not remarked any relation between: electromagnetism, particles, fields, spin, strong nuclear interaction, quantum mechanics, and in particular the relation between general relativity and electromagnetism.

© 2014 Global Journals Inc. (US)

But as we show here, these physics theories are particular cases of the ether elasticity theory. As we show, the ether is an elastic medium governed by the Navier-Stokes-Durand equation (NSDE) of elasticity. In the absence of gravitation the NSDE is given in Eq. (6) here below. As we show, this equation yields the Maxwell electromagnetic (EM) equations and the expression for the EM interactive forces. In the wave form, and in a region devoid of electric charges that create the field, Eq. (6) becomes Eq. (9). In presence of gravitational and/or EM fields, Eq. (9) is generalized by Eq. (25) in which V_P that appears now instead of c, is the phase velocity of a wave defined in the following. The general expression for V_P is, Cf. Eq. (31) of Ref. 4,

$$V_p = \frac{cE_T g_{44}}{eA_j \tilde{x}^j g_{44} + (E_T + eA_4)(\tilde{G}B - g_{j4}\tilde{x}^j)} \qquad (1)$$

where $\tilde{x}^\mu$, $\tilde{G}$, B, and E_T that appears in this expression are defined in Sec. IV of **Ref. 4**.

As shown here below, it appears: that the generalized NSDE yields the waves ξ associated to massive and electrically charged particle; that a specific sum $\hat{\xi}$ of these waves ξ forms a globule that moves like the particle and contains all its parameters; and that reciprocally, a specific sum of these globules $\hat{\xi}$ forms a wave ξ, these two sums are in fact are Fourier transforms that we call the "wave-particle reciprocity property". Then we show: that the fields are specific deformations of the ether; that the electron spin is the velocity of the points of the ether near the particle in its motion; that the strong nuclear interaction is due to the effects of the NSD theory and of the general relativity on massive and electrically charged particles even of same sign when they are sufficiently close one to the other; that the Schrodinger equation ensues from the NSDE, and that electromagnetism is the Newton approximation of Einstein's general relativity, this last fact is well in accord with the here above cited Einstein's opinion, namely: "*..Maxwell's electrodynamics cannot be considered a complete theory*".

Therefore the ether elasticity theory developed in our previous manuscripts and recalled here below is shown to unify the physics theories cited here above.

II. Notations and Generalities

x^μ, ($\mu = 1,2,3,4$), denote the four-coordinates, the Greek indices take the values 1,2,3,4, and the Latin, the values 1,2,3, these last refer to spatial quantities, the index 4 refers to temporal quantities. c denoting the light velocity in "vacuum", one always can impose $x^4 \equiv ct$. The Einstein summation will be used also with the Latin indices. As usual, $g_{\mu\nu}$ is the co-covariant Einstein's fundamental tensor, ds the Einstein infinitesimal element, A_μ the electromagnetic potential tensor, and $\dot{f}$ the quantity defined by $\dot{f} \equiv df/dt$, the expression for $\dot{s}$ is then

$$\dot{s} \equiv \sqrt{g_{\mu\nu}\dot{x}^\mu \dot{x}^\nu} \equiv \sqrt{\dot{x}^\mu \dot{x}_\mu} \ . \qquad (1a)$$

A particle of inertial rest mass m and of electric charge e will be denoted $\mathrm{Par(m,e)}$, and its velocity by V, we remind that its energy E_T is constant when it is submitted to static incident fields, that then $A_j = 0$, and we can chose the coordinates to be such that $g_{4j} = 0$. The Lagrange-Einstein function of a $\mathrm{Par(m,e)}$ submitted to the fields $g_{\mu\nu}$ and A_μ is denoted $L_G(g, A_\mu, m, e)$, for which the expression is

$$L_G(g, A_\mu, m, e) = -mc\dot{s} + eA_\mu \dot{x}^\mu / c \ , \qquad (2)$$

When there is no ambiguity $L_G(g, A_\mu, m, e)$ will be also denoted simply L_G. We denote by $d\ell$ the infinitesimal element of the trajectory of a $Par(m,e)$, by u^μ the quantity defined by $u^\mu \equiv dx^\mu / d\ell$, by u is the unitary vector along this trajectory of components $u^j \equiv dx^j / d\ell$, by $\Re(g, A_\mu)$ the spatial region in which are present the incident fields $g_{\mu\nu}$, and A_μ, but not any sources of these fields. We denote by p_μ the covariant momentum tensor, and by ∂_μ the derivatives $\partial / \partial x^\mu$. Since $p_\mu \equiv \partial L_G / \partial \dot{x}^\mu$, it follows that

$$p_\mu = -mc\, dx_\mu / ds + eA_\mu / c \ , \qquad (3)$$

therefore $L_G dt$

$$L_G dt = p_\mu dx^\mu \equiv p_4 dx^4 + p_j dx^j \ . \qquad (4)$$

A $Par(m_0, q_0)$, immobile at the origin **O**, (i.e., $m_0 >> m$), creates a Schwarzschild field indicated by g_{Sc} and an electrostatic field A_4. Since these fields are static, E_T is constant, and in spherical coordinates the sole modified components $g_{\mu\nu}$, are $g_{44} = \gamma^2 \equiv 1 - \alpha / r$, and $g_{11} = 1/\gamma^2$, with $\alpha \equiv 2m_0 k / c^2$, and, Cf. **Ref. 4**,

$$L_G(g_{Sc}, A_4, m, e) = -mc\sqrt{c^2\gamma^2 - V^2\gamma_a{}^2} + eA_4 \ . \qquad (5)$$

A spatial region in which are present these incident fields will be denoted $\Re(g_{Sc}, A_4)$.

© 2014 Global Journals Inc. (US)

III. The Elastic Interpretation of Electrodynamics

In Ref. 5 we have developed the "elastic interpretation of electrodynamics". In this interpretation, the ether Œ is shown to be an elastic medium of which the field ξ of the displacements of its points is governed by the Navier-Stokes-Durand equation

$$\mathbf{curl}(\mathbf{C}/2-\eta\mathbf{curl}\xi)=\rho\partial_{tt}\xi\,, \qquad (6)$$

where $\mathbf{C}$ denotes the volumetric density of couples applied to Œ, η, the elastic restoring rotation coefficient of Œ, and ρ, the volumetric density of Œ. By using the following variable changes:

$$\mathbf{E}\equiv\eta\mathbf{curl}\,\xi-\mathbf{C}/2\,,\quad \mathbf{H}\equiv\partial_t\xi\,,\quad \mathbf{B}\equiv\rho\partial_t\xi\,, \qquad (7a)(7b)(7c)$$

$$\mathbf{J}_e\equiv\partial_t\mathbf{C}/(2\eta)\,,\qquad \rho_e\equiv-\mathrm{div}[\mathbf{C}/(2\eta)]\,, \qquad (7d)(7e)$$

Eq. (6) yields the four following equations:

$$\mathrm{curl}\mathbf{E}+\partial_t\mathbf{B}=0\,,\quad \mathrm{curl}\mathbf{H}-\partial_t\mathbf{E}/\eta=\mathbf{J}_e\,, \qquad (8a)(8b)$$

$$\mathrm{div}\mathbf{B}=0\,,\quad \mathrm{div}\mathbf{E}=\eta\rho_e\,, \qquad (8c)(8d)$$

That are the Maxwell equations. It ensues that: Eqs. (7a), (7b), and (7c) represent respectively the elastic interpretation of: the electric field $\mathbf{E}$, the magnetic field $\mathbf{H}$, and the magnetic induction $\mathbf{B}$; ρ and η that, in the elastic interpretation, are respectively: the volumetric density and the elastic restoring rotation coefficient of the ether are respectively the coefficient of magnetic induction and the inverse of the electric induction coefficient ε_0, i.e., $\eta\equiv1/\varepsilon_0$; $\partial_t\mathbf{C}/(2\eta)$ and $-div[\mathbf{C}/(2\eta)]$ are the elastic interpretation of respectively the volumetric density of electric currents $\mathbf{J}_e$ and of electric charges ρ_e.

Furthermore, from (7d) and (7e) one deduces that $\mathbf{J}_e$ and ρ_e verify the continuity equation

$$\mathrm{div}\mathbf{J}_e+\partial_t\rho_e=0\,, \qquad (8e)$$

that expresses the charge conservation. One sees that, like presumed by Maxwell and by Einstein, the ether elasticity theory leads to Maxwell's electromagnetism.

Note: Eq. (6) is generalized in the following here below, it appears also that in the free ether then, $\eta=\eta_0=1/\varepsilon_0$, ρ_0 is a constant, and $\eta_0/\rho_0=c^2$.

In $\Re(0,A_\mu)$. and for $\mathbf{C}$=0, (6) is a wave equation which takes the form

$$\mathrm{curl}(c^2\mathrm{curl}\xi)=\omega^2\xi\,, \qquad (9)$$

Where $\omega\equiv2\pi\nu$. The solution ξ of (9), denoted also by ξ_{EM}, are of the form

$$\xi=\xi_0\exp[i\omega(-t+x/c)]\,,$$

Where ξ_0 is a constant vector perpendicular to the trajectory. As shown in **Ref. 5**, and in Sec. 8.3 here below, the electromagnetic forces are the interactions of the displacements ξ due to the electric charges. It appears that *electromagnetism is the particular case of elasticity.*

IV. Generalization of the Electromagnetic Waves to Waves Associated to Massive and Electrical Particles

The electromagnetic waves ξ associated to free photons, i.e., to $Par(0,0)s$ in $\Re(0,0)$ defined by Eq. (9), were generalized, Cf. **Ref. 7**, to waves ξ associated to $Par(m,e)s$ in $\Re(g,A_\mu)$ of the form

$$\xi=\xi_0\exp(i\phi) \qquad (10)$$

defined as following. As shown in Sec. II of **Ref. 4**, the Einstein four-motion equation of a $Par(m,e)$ in $\Re(g,A_\mu)$ can be formulated in the following Lagrange form

$$\frac{d}{dt}\left(\frac{\partial L_G}{\partial\dot{x}^\mu}\right)-\partial_\mu L_G=0\,, \qquad (11)$$

As shown, $-cp_4$ is the particle energy denoted E_T, which, in static fields, is constant and can be written

$$E_T=mc^2+h\nu\,, \qquad (12)$$

where ν is a frequency and h the Planck constant, for the photon $E_T=h\nu$. Now, $d\phi$ is defined by

$$d\phi\equiv L_G dt/\hbar\,, \qquad (13)$$

Then considering (4), and Sec. III of Ref.4,

$$\phi\equiv\frac{1}{\hbar}\left(-\int E_T dt+\int p_j dx^j\right), \qquad (14)$$

that is equivalent to

$$\phi\equiv\frac{1}{\hbar}\left(-\int E_T dt+\int\frac{E_T}{V_P}d\ell\right), \qquad (15)$$

where V_P is the phase velocity of the wave ξ of phase ϕ, and the spatial curvilinear integral is taken along trajectories defined here below. The general expression for V_P is given in Eq. (1), and that for the

© 2014 Global Journals Inc. (US)

particle velocity V is given in Sec. IV of **Ref. 4**. Here are these expressions for a $Par(m,e)$ in $\Re(g_{Sc},A_4)$, they are,

$$V_p = \frac{c\gamma}{\gamma_a}\frac{1}{\sqrt{1-b^{-2}\gamma^2}} \quad . \tag{16}$$

$$V = c(\gamma/\gamma_a)\sqrt{1-b^{-2}\gamma^2} \ , \tag{17}$$

Cf. Sec. V, (ibid), where b is defined by

$$b \equiv (E_T + eA_4)/(mc^2). \tag{18}$$

We remind also that V is related to V_P by the relation, Cf. **Ref. 7**, and as one can verify here,

$$\frac{\partial}{\partial E_T}\left(\frac{E_T}{V_P}\right) = \frac{1}{V} \ , \tag{19}$$

therefore, if on denotes $\phi' \equiv \hbar\,\partial\phi/\partial E_T$, then, on account of (15) and (19), one has

$$\phi' \equiv -t + \int d\ell/V \ . \tag{20}$$

Furthermore, denoting $\omega \equiv E_T/\hbar$ and considering the case where E_T is constant , (15) becomes

$$\phi \equiv \omega\left(-t + \int d\ell/V_P\right) . \tag{21}$$

Now in order to determine completely the phase ϕ one has to determine the trajectory equation of the $Par(m,e)$. This was done in **Ref. 7**, it appeared that the particle trajectory equation is the same as the optical differential equation of light rays, Cf. Sec. 3.2 of **Ref. 8**. The great lines of this demonstration are: from Eqs. (13) and (15), here above, it follows that L_G can be written also in the following form

$$L_G = E_T\left(-1 + \dot{\ell}/V_P\right), \tag{22}$$

where $\dot{\ell}$ denotes the path length covered par unit of time, on the wave ray, i.e., on the particle trajectory. Let us now consider the case where the particle is in static fields, since then E_T is constant, (22) and (11) yield

$$\frac{d}{dt}\frac{\partial}{\partial \dot{x}^j}\left(\frac{\dot{\ell}}{V_P}\right) = \partial_j\left(\frac{\dot{\ell}}{V_P}\right). \tag{23}$$

As shown in Sec. IV.A of Ref. 7, this equation yields the following one

$$\frac{d}{d\ell}\left[\frac{1}{V_P(\ell)}u^j(\ell)\right] = \frac{\partial^{\cdot}}{\partial x^j(\ell)}\left[\frac{1}{V_P(\ell)}\right], \tag{24}$$

which is the same as the optical differential equation of light rays, the phase ϕ is therefore determined. We have demonstrated that the waves ξ defined in (10) are the solution of the equation

$$\mathrm{curl}\left(V_P{}^2\,\mathrm{curl}\xi\right) = \omega^2\xi \ , \tag{25}$$

where ξ_0 depends only upon the spatial coordinates and is perpendicular to the trajectory. Equation (25) generalizes Eq. (9), and as shown in **Ref. 7**, the density of ether remains constant, furthermore one has the relation

$$\eta = \eta_0\, V_P{}^2/c^2 \ . \tag{26}$$

V. The Elastic Interpretation of the Fields

Considering (22) and (2), it follows that

$$mc\dot{s} = E_T\left(1 - \dot{\ell}/V_P\right) + eA_\mu\dot{x}^\mu/c \ . \tag{27}$$

Denoting by $F_{\mu\nu}$ the tensor defined by

$$F_{\mu\nu} = \partial_\mu A_\nu - \partial_\nu A_\mu \ , \tag{28}$$

One can verify considering the expressions for E and B given in (7), that

$$\dot{x}^i F_{ij} \equiv -(\mathbf{V}\wedge \mathrm{curl}\mathbf{A})_j = (\mathbf{V}\wedge\mathbf{B})_j = (\mathbf{V}\wedge\rho_0\partial\xi)_j \ , \tag{29}$$

$$F_{4j} = E_j = \eta\ (\mathrm{curl}\xi)_j \ . \tag{30}$$

It follows that $F_{\mu\nu}$, i.e., A_μ are functions of ξ, therefore as shown by (27), Einstein's element ds is also a function of ξ, this is the elastic interpretation of ds. From (22), one sees that L_G, i.e., V_P, defines the fields. That is to say, Cf. (26), that the fields are finally simply changes of the ether restoring rotation coefficient η. In $\Re(g,A)$, in presence of $Par(m,e)$, (16) of **Ref. 7**, and (22) here above, show that one cannot separate the gravitational field, the EM field, and the inertial mass m. In order to show the elastic side of the gravitational field, one considers the $Par(0,0)$ in $\Re(g,0)$, in this case (26) becomes Eq. (57a) of **Ref. 7**, which shows the change of the ether restoring rotation coefficient η. due to the gravitation field alone. For a $Par(m,0)$ in a $\Re(g_{Sc},A_4)$, m_0 together with m, change η_0 into η defined by

$$\eta = \eta_0\frac{\gamma^2}{\gamma_a{}^2}\frac{E_T{}^2}{\left[E_T{}^2 - \gamma^2(mc^2)^2\right]} \ . \tag{31}$$

which, for the photon, i.e., for .m=0 becomes

$$\eta = \eta_0\,\gamma^2/\gamma_a{}^2 \ . \tag{32}$$

This shows the changes of the restoring rotation coefficient η due to the gravitation field and to the

© 2014 Global Journals Inc. (US)

inertial mass m of the massive particle submitted to this field. In the general case, η is given by (26). Therefore:

the fields are simply changes of the coefficient η *of the ether restoring elastic rotation*.

VI. The Particle Wave Reciprocity

For simplicity we consider a $Par(m,0)$ submitted that a static gravitation, (or free), and will use the following notations: if ω is fixed, and ξ, ϕ, and ϕ' are functions of $\omega+\Delta\omega$, then they will be denoted $\xi(\Delta\omega)$, $\phi(\Delta\omega)$, and $\phi'(\Delta\omega)$, and if $\Delta\omega=0$, then they will be denoted simply ξ, ϕ, and ϕ'. Using the finite increment theorem we have shown in **Ref. 7**, that

$$\phi(\Delta\omega)=\phi+\Delta\omega\phi', \tag{33}$$

because the term in $(\Delta\omega)^2$ of this finite increment, is very small compared to the term in $\Delta\omega$, it follows that

$$\xi(\Delta\omega)=\xi\exp(i\Delta\omega\phi'). \tag{34}$$

Now, we have shown, (ibid), that the sum $\hat{\xi}(\Delta\omega)$ of waves $\xi(\vartheta)$ defined in Sec. VII of **Ref. 7**, is

$$\hat{\xi}(\Delta\omega)=\xi_0\exp\left[i\omega\left(-t+\int\frac{d\ell}{V_P}\right)\right]\mathrm{SINC}\left[\frac{\Delta\omega}{2}\left(-t+\int\frac{d\ell}{V}\right)\right], \tag{35}$$

where $SINC(x)\equiv\sin x/x$. $\xi(\Delta\omega)$ represents a wave $\xi=\xi_0\exp(i\phi)$ of which the amplitude is non zero only in the volume defined by $SINC(\pi\Delta\nu\phi')$ of length $2V_{mean}/(\sigma\Delta\nu)$, Cf. Sec. VII. B of **Ref. 4**, that moves with the particle velocity V. Thus, $\hat{\xi}(\Delta\nu)$ describes the properties of the particle, namely: its trajectory, velocity, energy, undulatory nature and its size. Therefore, $\hat{\xi}(\Delta\nu)$ is called "single-particle wave". For a free particle (35) becomes

$$\hat{\xi}(\Delta\nu)=\xi_0\exp\left[i\omega\left(-t+\frac{x}{V_{PF}}\right)\right]\bullet \mathrm{SINC}\left[\pi\Delta\nu\left(-t+\frac{x}{V_F}\right)\right] \tag{36}$$

where "F" refers to free particle, obtained ,e.g., by setting $\gamma=\gamma_a=1$ and $A_4=0$, in (16) & (17). For m=0, i.e., for free photons, (36) is a single-photon wave. Reciprocally, we have shown in Sec. VIII of **Ref. 7**, that

$$\int_{-\infty}^{\infty}\hat{\xi}(\Delta\omega,\tau)d\tau\equiv\xi\int_{-\infty}^{\infty}\mathrm{SINC}(\pi\Delta\nu\tau)d\tau=\frac{\xi}{\Delta\nu}. \tag{37}$$

Note that in (37) and (35) are Fourier transforms. Since the magnitude of ξ is arbitrary, one can say that ξ is constituted by single particle waves $\hat{\xi}(\Delta\nu)$, i.e., by particles, in particular, an EM wave is constituted by single-photon waves, i.e., by photons. Therefore, *the single-particle wave* $\hat{\xi}(\Delta\nu)$ *describes physical properties of the particle, i.e., denotes the particle, while the particle wave* ξ *is a sum of single particle waves i.e. ,of particles, this is the "wave-particle reciprocity".* The wave-particle reciprocity permits to understand the physical signification of the probabilistic aspect of quantum mechanics as recalled in Sec. 9 here below.

VII. The Elasto-Gravitational Interpretation of the "Strong Interaction"

In a $\Re(g_{Sc},A_4)$, the expression for the component A_4 of the electromagnetic potential tensor is

$$A_4=-q_0/(4\pi\varepsilon r). \tag{38}$$

But A_4 is not only created by q_0 but is also influenced by the Schwarzschild gravitational field. Indeed, η defined by $\eta\equiv1/\varepsilon$ is the elastic restoring rotation coefficient of the elastic medium Œ. Now η is related to the phase velocity V_P of the wave ξ associated to the $Par(m,e)$ in these fields by the relations (26) and (16). Now, contrarily to the gravitational force, the electrostatic force to which is submitted this particle do not depend upon its proper mass m, furthermore, in absence of gravitation η has to be η_0. From these two reasons it follows that in (38), the expression for η is given by (32), with a=0, therefore,

$$A_4=-q_0\gamma^4/(4\pi\varepsilon_0 r). \tag{39}$$

Let us consider again that e is such that $eq_0>0$, and $m_0>>m$, i.e., that the $Par(m_0,q_0)$ remains immobile even in the presence of the $Par(m,e)$. If the general relativity were not be taken into account, then the Coulomb repulsion due to e and q_0 would be greater than the Newton attraction due to m and m_0, i.e., these two particle could not be bound. However, when the general relativity and the elastic properties of the ether are taken into account, the gravitational attraction of these two particles can surpass their electrical repulsion. Indeed, inserting the expression (17) for the velocity V into (5), one obtains

$$L_G(g_{Sc},A_4,m,e)=-\frac{(mc^2\gamma)^2}{E_T+qA_4}+qA_4. \tag{40}$$

This expression (40) shows that the sole coordinate upon which $L_G(g_{Sc},A_4,m,e)$ depends, is r,

© 2014 Global Journals Inc. (US)

it follows that the force F to which the $Par(m,e)$ is submitted is radial. In Ref. 9, we demonstrated that: "The general relativistic gravitation and the elastic properties of the ether implies that there is a distance r_0 between the $Par(m,e)$ and the $Par(m_0,q_0)$ such that, for $r<r_0$ their attractive gravitational force is, even for $e\,q_0>0$, greater than their electric repulsion". This phenomena plays the role of the "strong interaction.". This demonstration is based on the fact that the $Par(m,e)$ is submitted to the radial force $F(r)\equiv\partial_r L_G(g_{Sc},A_4,m,e)$. As shown there the value r_0 of r at which $F(r_0)=0$ and $V(r_0)=0$, is the solution of the equation

$$\frac{4\pi\varepsilon_0 m m_0 k}{q q_0}=\left(1-\frac{\alpha}{r_0}\right)^{3/2}\left(1-\frac{3\alpha}{r_0}\right). \tag{41}$$

Since the left member of (41) is positive and smaller than 1, it follows that $r_0>3\alpha$, the exact value of r_0 is obtainable by numerical calculation methods. It appears that for $r\in[\alpha,\,r_0[$, $F(r)$ is attractive, this is the so called "strong interaction".

Therefore, an external particle that collides with the $Par(m,e)$ and causes $r>r_0$, causes its ejection acting as an emission. Reciprocally, when a charged particle approaches a $Par(m_0,q_0)$ at a distance r smaller than r_0, they remain bound. *These phenomena may be associated to fission and fusion processes*.

VIII. The Quantum Mechanics as a Particular Case of the Ether Elasticity Theory

The particle waves ξ associated to a $Par(m,e)$ are the solutions of the "ether elasticity wave equation" (25). One considers that the fields to which is submitted a $Par(m,e)$ are static. In this case, the waves ξ are of the form (10) where ϕ is defined by (21) or (14), with E_T constant and $\omega=E_T/\hbar$.

When a $Par(m,e)$ is submitted to a Schwarzschild field and to a Coulomb field created by the $Par(m_0,q_0)$, i.e., a particle of mass m_0 and electric charge q_0, immobile at the origin O, the expression for V_P is given by (16). In the "non-relativistic approximation", i.e., when α/r is neglected in front of 1, and $h\nu+eA_4$ in front of mc^2, but where $mc^2\alpha/r$ is not neglected, ${V_P}^2$ becomes, Cf. Eq. (11) of Ref. 10,

$${V_P}^2\cong\frac{{E_T}^2}{2m(h\nu+\hat{a}/r)}, \tag{42}$$

where $\hat{a}$ is defined by $\hat{a}\equiv|eq_0|/(4\pi\varepsilon)+mm_0k$. Now, denoting by $\boldsymbol{\psi}_0$ the vector defined by

$$\boldsymbol{\psi}_0\equiv\xi_0\exp\left(i\omega\int d\ell/V_P\right), \tag{43}$$

Eq. (10) can be written

$$\xi=\boldsymbol{\psi}_0\exp(-i\omega t) \tag{44}$$

inserting (44) in (25), one obtains

$$\mathbf{curl}\left({V_P}^2\mathbf{curl}\,\boldsymbol{\psi}_0\right)=\omega^2\boldsymbol{\psi}_0. \tag{45}$$

As shown in Ref. 10, Eq. (45) can be written

$$-\nabla^2\boldsymbol{\psi}_0+\boldsymbol{\Xi}=\left(\omega^2/{V_P}^2\right)\boldsymbol{\psi}_0, \tag{46}$$

where, $\boldsymbol{\Xi}$ is defined by

$$\boldsymbol{\Xi}\equiv\left[\mathbf{grad}.\left(\log {V_P}^2\right)\right]\wedge\mathbf{curl}\,\boldsymbol{\psi}_0. \tag{47}$$

Considering (42), this Eq. (46) becomes in the non-relativistic approximation

$$-\nabla^2\boldsymbol{\psi}_0+\boldsymbol{\Xi}\cong\left(2m/\hbar^2\right)(h\nu+\hat{a}/r)\boldsymbol{\psi}_0, \tag{48}$$

but as shown, (ibid),

$$|\boldsymbol{\Xi}|\cong\left|\frac{\sqrt{2m}}{\hbar}\frac{\hat{a}}{r^3}(\mathbf{u}\cdot\mathbf{r})\boldsymbol{\psi}_0\right|<<\left|\frac{2m}{\hbar^2}\left(h\nu+\frac{\hat{a}}{r}\right)\boldsymbol{\psi}_0\right|, \tag{49}$$

and moreover, that in a circular bound state, **u** and **r** are orthogonal, i.e., $\mathbf{u}\cdot\mathbf{r}=0$, i.e., $\boldsymbol{\Xi}=0$. It follows that (48) can be written with a good approximation, considering that $\hat{a}/r\cong eA_4$

$$-\left(\hbar^2/2m\right)\nabla^2\psi_0\cong eA_4\psi_0+h\nu\psi_0 \tag{50}$$

Now, multiplying the tow members of (50) by $\exp(-i2\pi\nu t)$ and denoting

$$\psi\equiv\boldsymbol{\psi}_0\exp(-i2\pi\nu t), \tag{51}$$

Eq. (50) becomes

$$-\left(\hbar^2/2m\right)\nabla^2\psi\cong eA_4\psi+h\nu\psi \tag{52}$$

that can be written as following

$$-\left(\hbar^2/2m\right)\nabla^2\psi\cong eA_4\psi+i\hbar\partial_t\psi. \tag{53}$$

© 2014 Global Journals Inc. (US)

Equation (53) is Schrodinger's equation. We have therefore demonstrated that this equation is a particular form of the ether elasticity equation (25), i.e., that: the ether elasticity theory generalizes the quantum mechanics. We have therefore demonstrated that this equation is a particular form of the ether elasticity equation (25), i.e., that: the ether elasticity theory generalizes the quantum mechanics.

Let us furthermore remark, that the univocal motion of the classical massive particle occurs when there is a full superposition of waves that forms the single-particle wave. But such a full superposition cannot exist in a bound state of atomic size, as for example the electron in a atom. Indeed, in such a bound state, the waves that constitute the globule interfere with themselves, and only the resonant ones remain non destructed by these interferences and are even amplified Cf. Sec. 7 of Ref. 11, and Sec. 4 of Ref. 10. These resonant waves are quantum states. Since following the "wave-particle reciprocity property", such a resonant wave is also constituted by a multitude of globules, i.e., of particles, the results of measurement are not univocal, i.e., follow probabilistic laws. This explains the probabilistic properties of the massive bound particle. These resonant waves can be directly determined even in presence of gravitation. When m=0, the particle is a photon and, as shown here above, it is a sum of EM waves that behaves as a hard small projectile. The fact that, reciprocally, an EM wave is constituted by photons is the cause of the projectile effect that accompanies EM waves as, e.g., in the photo-electric effect.

IX. The Electron Spin as Resulting from the Ether Elasticity

A moving $Par(m,e)$, i.e., $\hat{\xi}(m,e)$ creates a Lienard-Wiechert covariant potential tensor from which one deduces the electromagnetic field and in particular the magnetic field H. Now, in the ether elasticity theory, H *is the velocity* $\partial_t \xi$ *of the ether points,* Cf. Eq. (7b). The fundamental fact that we demonstrate, is that on a fixed observatory point $\mathbf{r}_{ob}$ near at a given instant to the moving electron, i.e., to the moving $\hat{\xi}(m,e)$, the velocity of the ether denoted there by $\partial_t \xi_{ob}$ is of the same form as the velocity of a point of a rotating solid. This phenomenon is the electron spin which, as we show, in a quantum state of an atom, can take only quantized values.

At the observatory point $\mathbf{R}_{ob}$, let consider the electromagnetic field created by a moving electric charge e of velocity V. This field derives from the Lienard-Wiechert covariant potential tensor A_μ for which the expression is

$$A_\mu = -\frac{e}{4\pi\varepsilon_0}\frac{V_\mu}{(Rc - \mathbf{R}\cdot\mathbf{V})}, \tag{54}$$

where V_μ is such that $V_4 = c$, and V_j denotes the covariant spatial components of V, and where $\mathbf{R}$ denotes the radius vector going from the center of the charge to the point of observation $\mathbf{R}_{ob}$ at the retarded time. If A denotes the vector of covariant spatial components A_j, then the expression for the magnetic field H created by e is

$$\mathbf{H} \equiv (\mathbf{curl}\ \mathbf{A})/\rho\,. \tag{55}$$

On account of Eq. (54), (55), here above, and of Eqs. (63.8) and (63.9) of Ref. 12 expressed in MKSA units, the explicit expression for H at $\mathbf{R}_{ob}$, is

$$\mathbf{H} \equiv \partial_t \xi = \frac{e\mathbf{R}}{4\pi c\rho\varepsilon_0 R(R - \mathbf{R}\cdot\mathbf{V}/c)^3} \wedge \left\{\frac{(\mathbf{R} - \mathbf{V}R/c)}{\beta^2} + \frac{\mathbf{R}\wedge[(\mathbf{R} - \mathbf{V}R/c)\wedge\dot{\mathbf{V}}]}{c^2}\right\}, \tag{56}$$

where $\beta^2 \equiv 1/(1 - V^2/c^2)$, and $\dot{\mathbf{V}} \equiv d\mathbf{V}/dt$ denotes the acceleration of e.

Let us consider now the case where $\mathbf{R}_{ob}$ is very close to e and then denoted then by $\mathbf{r}_{ob}$, i.e., where R, denoted then by **r**, is very small. In this case, in Eq. (56), $\mathbf{r}\wedge[(\mathbf{r} - \mathbf{V}r/c)\wedge\dot{\mathbf{V}}]/c^2$ is negligible in front of $(\mathbf{r} - \mathbf{V}r/c)/\beta^2$, and $\mathbf{r}\cdot\mathbf{V}/c$ in front of r. Therefore, at $\mathbf{r}_{ob}$, the expression for H denoted then $\mathbf{H}_{ob}$ is the following

$$\mathbf{H}_{ob} = \rho_e \mathbf{V}\wedge\mathbf{r}\,, \tag{57}$$

where ρ_e is the density of electrical charge defined by $e/(4\pi r^3)$. Yet, as shown in Eq. (3), $\mathbf{H}$ is the velocity $\partial_t \xi$ of a point of the ether. Therefore, at $\mathbf{r}_{ob}$, the expression for $\partial_t \xi$ denoted more specifically by $\partial_t \xi_{ob}$, is

$$\partial_t \xi_{ob} = \mathbf{H}_{ob}\,, \tag{58}$$

where $\mathbf{H}_{ob}$ id defined in (57). It appears therefore, that the velocity $\partial_t \xi_{ob}$ of a point of the ether at $\mathbf{r}_{ob}$, defined by (57) and (58), is of the same form as the velocity $\mathbf{V}_\Omega$ of a point on a rotating solid of rotation vector $\mathbf{\Omega}$ and of radius r, since $\mathbf{V}_\Omega$ is of the form

$$\mathbf{V}_\Omega = \mathbf{\Omega}\wedge\mathbf{r}\,. \tag{59}$$

One sees, by considering (57) and (59), that all happens as if

© 2014 Global Journals Inc. (US)

$$\mathbf{\Omega} = \rho_e \mathbf{V} . \qquad (60)$$

Remark. $\rho_e \mathbf{V}$ has the dimension [1/T] like $[\Omega]$, in deed in Ref. 4, we have shown that in the ether elasticity theory, then $[\rho_e] = [1/L]$.

Now let us take $r = r_e$, where r_e is the radius of e, in this case $\mathbf{\Omega}$ is the spin of the electron, and will be denoted $\mathbf{\Omega}_e$. In a quantum state, e.g., of an hydrogenous atom, one has, Cf. Eqs. (10), (43) & (47) of Ref. 13,

$$V = \frac{eq}{4\pi\varepsilon_0}\frac{1}{n\hbar}, \qquad (61)$$

here q is the positive electric charge of the immobile nucleus around which the electron gravitate. Therefore

$$\Omega_e = \pm\rho_e \frac{eq}{4\pi\varepsilon_0}\frac{1}{n\hbar}, \qquad (62)$$

that shows the quantum states of the electron spin in an hydrogenous atom. It appears that the $\Pr(m,e)$, is a globule $\hat{\xi}(m,e)$, i.e., a deformation of the ether that moves with the velocity of the particle. If this particle is an electron, then, in its motion the globule associated to this electron creates, out of it, a field ξ_{ob} of the displacements of the points of the ether such that near to this globule, the velocities $\partial_t \xi_{ob}$ of the points of the ether are of the same form as the velocities of the points of a rotating solid. In a quantum state of an atom, this spin can take only quantized values. These results regarding the elastic interpretation of the electron spin and the results described in Refs. 4, 5, 7, and 13 ensue from the "Ether Elasticity Theory" that takes into account Einstein's "General Relativity", Ref. 14.

X. The Elastic Ether Theory as Implying that EM is the NA of the General Relativity

a) The field created by an electric charge as of the same form as the NA of the field created by a $\mathrm{Par}(m,0)$

Considering Eq. (2) here above, Eq. (9) of Ref. 16, and the notation $\delta g_{\mu\mu} = g_{\mu\mu} - g_{0,\mu\mu}$, where $g_{0,\mu\mu}$ is the free value of $g_{\mu\mu}$, one has

$$L_G(g,0,m,0) = -mc\dot{s} = -mc\sqrt{c^2 - V^2} - mc\frac{\left(\delta g_{\mu\mu}\dot{x}^\mu\dot{x}^\mu + 2g_{4j}\dot{x}^4\dot{x}^j + 2\Delta_{i\neq j}\right)}{2\sqrt{\left(c^2 - V^2\right)}} + \ldots \qquad (63)$$

Let $L_{GNA}(g,0,m,0)$ denote the NA of $L_G(g,0,m,0)$, one has, Cf. Eq. (13) of Ref. 16,

$$L_{GNA}(g,0,m,0) = -mc\sqrt{c^2 - V^2} + mG_\mu \dot{x}^\mu / c \qquad (63a)$$

where G_μ is the tensor defined by

$$G_4 \equiv -c^2\,\delta g_{44}/2, \qquad G_j \equiv -c^2 g_{4j}. \qquad (64)$$

On the other hand one has

$$L_G(0, A_\mu, m, e) = -mc\sqrt{c^2 - V^2} + eA_\mu \dot{x}^\mu / c, \qquad (65)$$

Comparing (63a) and (65), one sees that: *the tensor* eA_μ *play the same role as the tensor* mG_μ; this is reinforced by the fact that, in the NA of the Schwarzschild field, $G_j = 0$, and the expression for G_4, denoted then $G_{4,S}$, is

$$G_{4,S} = m_0 k / r . \qquad (66)$$

On sees that $G_{4,S}$ is of the same form are the Coulomb potential. Let us now compare the field created by a moving electric charge q_0 and the NA of the field created by a moving a particle of mass M. The "single-particle wave" $\hat{\xi}(\Delta\omega)$ defined in (35), represents a wave $\xi = \xi_0 \exp(i\phi)$ of which the amplitude of vibration is non zero only in the volume defined by $SINC(\pi\Delta\nu\phi')$ of length $2V_{mean}/(\sigma\Delta\nu)$, Cf. Ref. 4. This volume moves with the particle velocity V. But even though it is of small volume, the globule $\hat{\xi}(\Delta\nu)$ perturbs also all the ether. This ether perturbation outside of the globule is denoted $P\left[\hat{\xi}(\Delta\omega)\right]$, it is propagated in the ether (supposed free before the apparition of this perturbation), with the velocity c much greater than V supposed constant in order to not involve other parameters. That is to say that, after its emission, $P\left[\hat{\xi}(\Delta\omega)\right]$ is no more influenced by $\hat{\xi}(\Delta\omega)$. We now determine $P\left[\hat{\xi}(\Delta\omega)\right]$ at a fixed observation point $\mathbf{R}_{ob}$. To this purpose we will use the fact that the NA of $P\left[\hat{\xi}(\Delta\omega)_{V=0}\right]$, i.e., the NA of the ether perturbation due to the immobile M is $G_{4,S}$ defined in (66), and the fact that

"the fields created by a particle moving at the velocity $-\mathbf{V}$ *seen at fixed point, is the same as the field created by an immobile particle seen by a mobile particle of moving at the velocity* $\mathbf{V}$ *"*

Therefore the NA of $P\left[\hat{\xi}(\Delta\omega)\right]$ is the tensor G_μ obtained by applying the Lorentz transform,

© 2014 Global Journals Inc. (US)

involving $\mathbf{V}$ and $G_{4,S}$. By using this transform, we demonstrated in Sec. V of Ref. 16, that

$$G_\mu = Mk\,V_\mu/(Rc - \mathbf{R}\cdot\mathbf{V}). \tag{67}$$

Here, V_j denote the covariant component "j" of $\mathbf{V}$, $V_4 = c$. Equation (67) shows that G_μ is a Lienard-Wiechert potential tensor, i.e., is the gravitational potential field seen at an observation point R_{ob} due to the particle of mass M that moves with the velocity $\mathbf{V}$, and R is the distance between the position of M at the time t' where the signal was emitted and reaches the point R_{ob} at the time t such that $(t-t')c = R$. Now, the EM field created by a moving electric charge q_0 of velocity $\mathbf{V}$ that reaches R_{ob} is the Lienard-Wiechert potentials A_μ defined by

$$A_\mu = -\frac{q_0}{4\pi\varepsilon_0}\frac{V_\mu}{(Rc - \mathbf{R}\cdot\mathbf{V})}. \tag{68}$$

Therefore the explicit expression for $L_G(0, A_\mu, m, e)$ is obtained by inserting (68) in (65), and that of $L_{GNA}(g, 0, m, 0)$ by inserting (67) in (63a). One see again the similarity of there two Lagrange-Einstein functions. In particular , when $\mathbf{V} = 0$, then in (68), only A_4 is not null for which the expression is given in (38), and in (67), only G_4 is not null which is then denoted $G_{4,S}$ for which the expression is given in (66). This is also valid when $V << c$. It appears that: *The EM field due to an electric charge is similar to the NA of the gravitational field due to a massive particle.*

b) Behavior of the ether globule associated to the immobile massive particle

Let us consider Eq. (36) associated to a $Par(M,0)$, when V_F tends toward 0, then, Cf. Sec. 6 here above, V_{PF} tends toward ∞, E_T tends toward Mc^2, and $\hat{\xi}(\Delta\omega)_F$ tends toward $\hat{\xi}(\Delta\omega)_{V=0}$ defined by

$$\hat{\xi}(\Delta\omega)_{v=0} = \xi_0 \exp\left(-i\frac{2\pi}{h}Mc^2 t\right)\bullet \mathrm{SINC}\left[\frac{\Delta\omega}{2}\left(-t + \frac{x}{0}\right)\right] \tag{69}$$

Since $SINC(\pm\infty) = 0$, it follows that $\hat{\xi}(\Delta\omega)_F$ disappears when V_F tends toward 0. The question is then: what becomes this immobile globule that disappears? The response is: *it becomes a Schwarzschild gravitational field.*

c) The EM forces and the gravitational forces as interactions of ether deformations

In a flat spatial region, the electrostatic field $\mathbf{E}_{q_0}$ due to q_0 at O is related to the displacements ξ_{q_0} of the points of the ether defined by the relation

$$\mathbf{curl}\,\xi_{q_0} = \varepsilon_0 \mathbf{E}_{q_0}, \tag{70}$$

Cf. Eq. (7a). From this relation, Cf. Ref. 16, one obtains the expression for the angle Φ_{q_0} described by a point of the ether on a small circle around the radius vector r:

$$\mathbf{E}_{q_0} = 2\mathbf{\Phi}_{q_0}/\varepsilon_0 = q_0\mathbf{r}/(4\pi r^3), \tag{71}$$

Let $\mathbf{F}_{q_0,q}$ be the interactive force between q_0 and another electric charge e that can be mobile. As demonstrated, in Ref. 5, the expression for the potential $U_{q_0,q}$ such that $\mathbf{F}_{q_0,q} = -\nabla U_{q_0,e}$, is, Cf. Eq. (26), (ibid) and (71) here,

$$\begin{aligned} U_{q_0,q} &= q_0 q/(4\pi\varepsilon_0 r) = \varepsilon_0 \iiint_{B(\mathbf{O},r)} \mathbf{E}_{q_0}\cdot\mathbf{E}_q dv \\ &\equiv \frac{4}{\varepsilon_0}\iiint_{B(\mathbf{O},r)} \mathbf{\Phi}_{q_0}\cdot\mathbf{\Phi}_q dv \end{aligned}. \tag{72}$$

where $B(\mathbf{O}, r)$ denotes the sphere of radius r centered at O.

We show now that the NA of the field $E_{m_0,NA,S}$ due to an immobile neutral massive particle of mass m_0 is

$$E_{m_0,NA,S} = -m_0 k\,\mathbf{r}/r^3. \tag{73}$$

Indeed, in the NA, the force $\mathbf{F}_{m_0,m,NA}$ acting between m_0 and another particle of mass m is

$$\mathbf{F}_{m_0,m,NA} = -mm_0 k\,\mathbf{r}/r^3 = m\mathbf{E}_{m_0,NA,S}. \tag{74}$$

This force derives from the potential of force $U_{m_0,m}$, defined by

$$U_{m_0,m} = -m_0 mk/r. \tag{75}$$

By the same calculation as in Sec. 4.2 of Ref. 5, and comparing the result with (75), one has

$$U_{m_0,m} = -\frac{1}{k}\iiint_{B(\mathbf{O},r)} \mathbf{E}_{m_0}\cdot\mathbf{E}_m dv. \tag{76}$$

Now

$$\mathrm{curl}\,\xi_{m_0} = m_0\,\mathbf{r}/r^3 = 2\mathbf{\Phi}_{m_0}, \tag{77}$$

therefore

$$E_{m_0,NA,S} = -2k\mathbf{\Phi}_{m_0}, \tag{78}$$

© 2014 Global Journals Inc. (US)

It follows, by comparison with (72), that

$$U_{m_0,m} = -m_0 m k \frac{1}{r} = -4k \iiint_{B(\mathbf{O},r)} \mathbf{\Phi}_{m_0} \cdot \mathbf{\Phi}_m dv \,. \qquad (79)$$

This shows that: *the electrostatic field* $\mathbf{E}_{q_0}$ *and the gravitostatic field* $\mathbf{E}_{m_0,NA,S}$ *are densities of couple of forces applied to the ether, and the inductions* $\varepsilon_0 \mathbf{E}_{q_0}$ *and* $-\mathbf{E}_{m_0,NA,S}/k$ *are twice the angle of rotation of the ether around the radius vector* $\boldsymbol{r}$ *issued from the electric charge* q_0*, Resp. from the massive particle* m_0*, at* O.

XI. Conclusion

This Navier-Stokes-Durand equation of the ether elasticity unifies the following particular cases:

- The Maxwell equations of electromagnetism.
- The constitution of particles and fields as changes in ether.
- The nuclear strong interaction,
- The quantum mechanics,
- The electron spin, and,
- Electrodynamics as the NA of the general relativity.

References Références Referencias

1. A. Einstein, Sci. Am. Special Issue, 41-45 (1991), (reprinted from the April 1950 issue).
2. J. C. Maxwell, *A Treatise on Electricity and Magnetism,* (Dover, New-York, 1954).
3. A. Einstein, Ether and the theory of relativity: The collected papers of Albert Einstein(Springer, Berlin, 1920), address delivered on May 5,1920, at the university of Leyden.
4. D. Zareski, Phys. Essays 25. 2 (2012).
5. D. Zareski, Foundation of Physics Letters. Vol. 14, No. 5, October (2001).
6. E. Durand, *Electrostatique et Magnétostatique*, (Masson & Cie, 1953).
7. D. Zareski, Phys. Essays 26. 2 (2013).
8. M. Born and E. Wolf, *Principles of Optics* (Cambridge University Press, Cambridge, 2006).
9. D. Zareski, Phys. Essays 26. 4 (2013).
10. D. Zareski, Appl. Phys. Research. Vol. 6. No. 4; 2014.
11. D. Zareski, Progress in Relativity, Gravitation, Cosmology, ISBN: 978-1-61324-811-9, (Nova Sciences Publishers Inc. NY, USA), (2011).
12. L. D. Landau and E. M. Lifshitz, *The Classical Theory of Fields*, (Pergamon Press, Reading, MA. 1962).
13. D. Zareski, Appl. Phys. Research. Vol. 6. No. 5; 2014.
14. A. Einstein, "The Foundation of the General Relativity",(1916), reprinted in Ref. 15.
15. Lorentz, H A., Einstein, A., Minkowski, H., and Weyl, H., "*The principle of relativity*", (Dov. Pub. Inc.), (1923).
16. D. Zareski, Phys. Essays 27. 4 (2014).

© 2014 Global Journals Inc. (US)

This page is intentionally left blank

© 2014 Global Journals Inc. (US)

Global Journal of Science Frontier Research: A
Physics and Space Science
Volume 14 Issue 6 Version 1.0 Year 2014
Type : Double Blind Peer Reviewed International Research Journal
Publisher: Global Journals Inc. (USA)
Online ISSN: 2249-4626 & Print ISSN: 0975-5896

Reasons for Removal of the Moon

By S. Orlov
Petrozavodski State University, Russian Federation

Abstract- In article the new concept of an explanation of the reason of removal of the Moon from Earth is offered to consideration. It is based on the theory of vortex gravitation, cosmology and a cosmogony. The main reason for this removal is that gravity, the earth's field does not create our planet, and ether vortex The orbital plane of the Moon doesn't coincide with the plane of a gravitational whirlwind that creates reduction of forces of an attraction of the Moon to Earth on some sites of its orbit. Removal of a lunar orbit happens a consequence of it.

Keywords: theory of vortex gravitation, celestial mechanics.

GJSFR-A Classification : FOR Code: 020199p

Strictly as per the compliance and regulations of :

© 2014. S. Orlov. This is a research/review paper, distributed under the terms of the Creative Commons Attribution-Noncommercial 3.0 Unported License http://creativecommons.org/licenses/by-nc/3.0/), permitting all non commercial use, distribution, and reproduction in any medium, provided the original work is properly cited.

Reasons for Removal of the Moon

S. Orlov

Abstract- In article the new concept of an explanation of the reason of removal of the Moon from Earth is offered to consideration. It is based on the theory of vortex gravitation, cosmology and a cosmogony. The main reason for this removal is that gravity, the earth's field does not create our planet, and ether vortex The orbital plane of the Moon doesn't coincide with the plane of a gravitational whirlwind that creates reduction of forces of an attraction of the Moon to Earth on some sites of its orbit. Removal of a lunar orbit happens a consequence of it.

Keywords: theory of vortex gravitation, celestial mechanics.

I. Introduction

Now it is established that the orbit of the satellite of our planet of the Moon moves away from Earth on 38 mm/year [1], [2]. Modern researchers this removal is explained by tidal acceleration of the Moon. The so-called tidal acceleration of the Moon - an effect called gravitational tidal interaction in the Earth-Moon system. The main consequence of this effect is the change of the orbit of the Moon and the Earth's rotation slowing down around the axis.

Objective calculations of change of dynamic properties of the Moon and Earth, connected with inflow it wasn't presented.

With the same probability it is possible to draw an opposite conclusion which consists in the following. If movement of the Moon is slowed down by gravitational and tidal interaction, the centripetal force operating on the Moon, has to decrease in direct ratio to a square of reduction of orbital speed of the Moon. In this case there will be a prevalence of force of terrestrial gravitation and the Moon has to fall to the Ground.

According to the theory of vortex gravitation, the Moon has no gravitational effect on the Earth and on its surface. High tides and low tides are not caused by the attraction of the moon and plane-symmetric gravitational field of the Earth.

In the present article the analysis of dynamics of the Moon also is based on the theory of vortex gravitation, cosmology and a cosmogony [3]. The principles and the equations of the theory of vortex gravitation are presented in the following chapter.

II. About the Theory of Vortex Gravitation

Theory of vortex gravitation and cosmology is based on the assumption that gravity creates vortices (torsion) gas, over a low-density substance called ether. Each space vortex generates other vortices of lower order. The size of each vortex corresponds to the size of a space system, which he created. The value of the universal vortex corresponds to the universe. Galactic vortex has a diameter equal to a diameter of the galaxy. Sunny ether vortex measured by the size of the solar system. This correspondence should be in every space system. Vortex gravitation theory assumes that there are in excess of the small eddies that form the elementary particles of which are all the celestial bodies.

Orbital speed of rotation of the ether in each vortex reduce your speed is inversely proportional to the square of the distance to the center of the vortex. In accordance with the laws of fluid dynamics, each vortex varies inversely proportional to the pressure change of the orbital velocity of the ether. The pressure gradient causes the ejection force (gravity) acting on nucleons any body or substance, toward the least pressure. I.e. toward the center of the vortex.

Consider the equation of vortex gravitation, resulting in the theory [3].

Author: Petrozavodski State University, PACS: 98.80.Bp.
e-mail: ion@sampo.ru

© 2014 Global Journals Inc. (US)

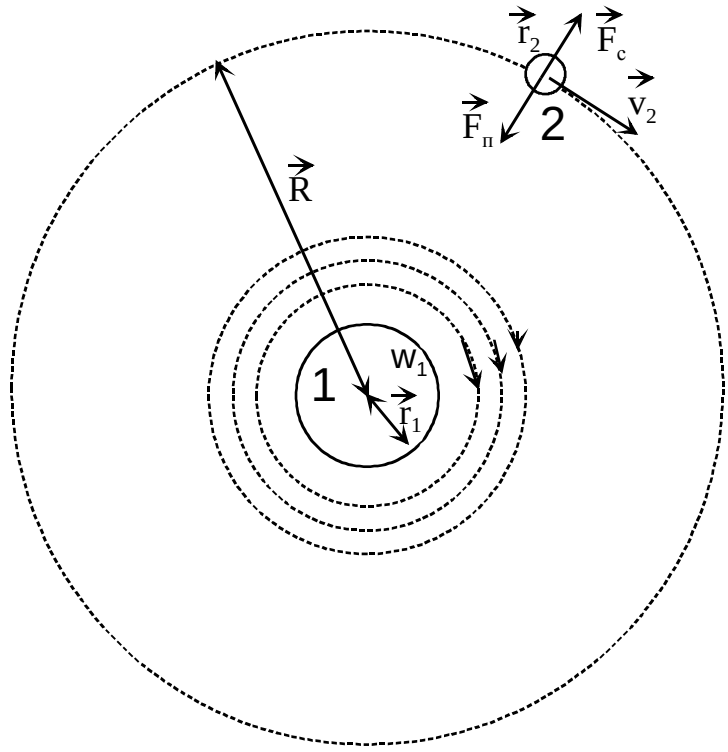

Figure 1 : Two-dimensional model of the gravitational interaction of two bodies. The forces acting on the body 2.

Fc - centrifugal force Fп,- the attraction force of the body 2 with the body 1, v_2 - linear velocity of the body 2 in its orbit, R - Orbit radius, r_1 - radius of the body 1, r_2 - the radius of the body 2 w1 - the angular velocity of rotation of the air on the surface of the body 1, m2 - mass of the body 2.

As a result, the vortex motion a pressure gradient. Radial distribution of pressure and velocity in the ether [3] defined on the basis of the Navier-Stokes equations for the motion of a viscous fluid (gas).

$$\rho\left[\frac{\partial}{\partial t}+\vec{v}\cdot \mathrm{grad}\right]\vec{v}=\vec{F}-\mathrm{grad}\,P+\eta\Delta\vec{v} \qquad (1)$$

In cylindrical coordinates with the radial symmetry $v_r = v_z = 0 = v_{(r)}$, P = P (r)φ, v equation can be written as a system.

$$\begin{cases} -\dfrac{v(r)^2}{r}=-\dfrac{1}{\rho}\dfrac{d\,P}{d\,r} \\ \eta\cdot\left(\dfrac{\partial^2 v(r)}{\partial r^2}+\dfrac{\partial v(r)}{r\,\partial r}-\dfrac{v(r)}{r^2}\right)=0 \end{cases} \qquad (2)$$

Where **ρ = 8.85 x 10^{-12}** kg \ cub m - the density of [4] [4], $\vec{v}$_ the velocity vector of the ether, P - pressure air , η - viscosity.

In cylindrical coordinates for the module gravity $\vec{F}_п$

$$F_п = V\cdot\frac{\partial P}{\partial r} \qquad (3)$$

Then comparing (2) and (3) for an incompressible ether (**ρ=const**) we find that

$$F_п = V\cdot\rho\cdot\frac{v(r)^2}{r} \qquad (4)$$

After the necessary transformations (full payment is set out in the theory [3]), we obtain the equation for the determination of the force of gravity, depending on the speed of rotation of the ether.

$$F_п = \frac{4\cdot\pi\cdot r_n^{\,3}\cdot\rho}{3\cdot m_n}\cdot\frac{w_1^{\,2}\cdot r_1^{\,3}\cdot m_2}{r^2} \qquad (5)$$

r_n, m_n – radius and the mass of the nucleon.

Transform the formula (5). Equate r_1 = r. We substitute w_1 r_1 = v_1 and the numerical values of ρ, r_n and m_n, we obtain:

© 2014 Global Journals Inc. (US)

$$F_n = 3,83 \times 10^{-29} \times V_1{}^2 \times \frac{m}{r} \qquad (6)$$

It is worth noting an important condition - equation (5) describes the forces pushing (gravity) in only one plane of the world space - in the central plane of the considered space vortex. In the theory of vortex gravitation [3] found that the strength of the vortex gravitation away from the central plane of gravity is inversely proportional to the cube of this deletion. As a result of this law all the celestial bodies - satellites orbiting the center of the vortex on a plane having deviations from the gravitational plane of the vortex, have elliptical orbits of their treatment. Each celestial body (satellite) crosses the central plane of the vortex centers of perihelion and aphelion. In the tops of the small axis of the orbit of satellites has the greatest deviation from the gravitational plane. Therefore, at these points with respect to gravity is the smallest force of gravity to the center of the torsion bar. The magnitude of the eccentricity of the orbit path (ellipse) of any satellite depends on the inclination of the orbit to the sun torsion. In theory, [3] a universal equation for determining the swirl forces of gravity at any point of the space (Fgv), depending on the deviation (i) of this point of gravity plane.

$$F_{gv} = F_{gn} \times Cos^3\ i \qquad (7)$$ where

i - the angle of deviation of the point considered from the gravitational plane vortex.

Fgn - the force of gravity in a plane gravitational vortex, which can be defined by the formula (5) or the classical formulas.

In the theory of vortex gravitation was the following dependence of the orbits of celestial bodies - the ratio of the minor axis of the orbit (b) to the semi-major axis (a) is the cosine of the angle of deflection (i) the top of the semi-minor axis of the gravitational plane.

$$\text{Cos i} = \frac{b}{a} \qquad (8)$$

Fig. 2 shows a side view of planes: plane of the Earth gravitational vortex (e) and the orbital plane of the moon (m).

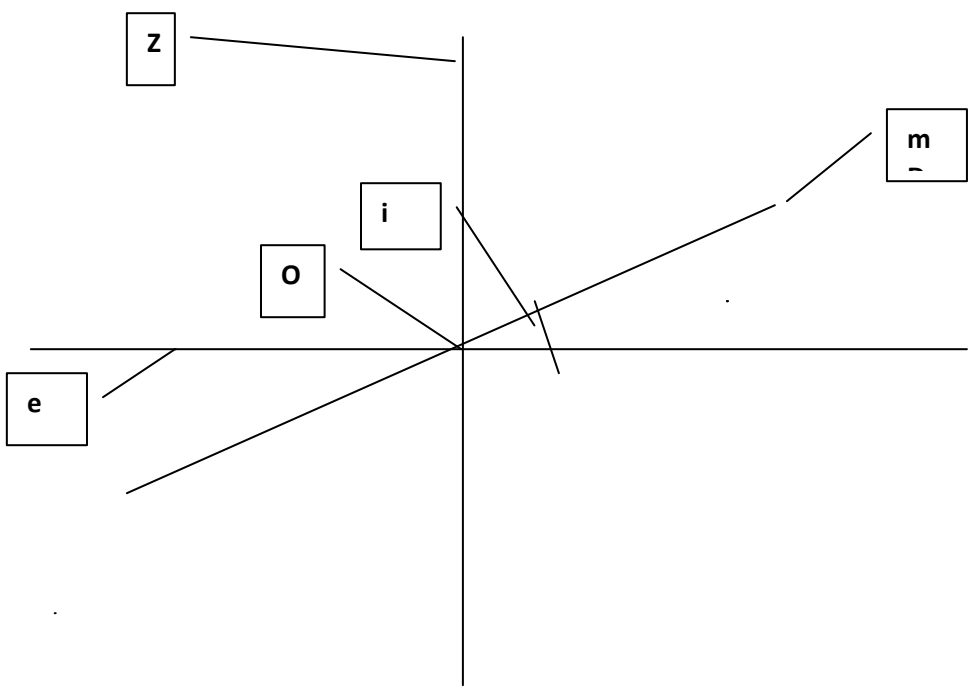

Figure 2 : Lateral projection of gravity and orbital planes, where:

O - the center of the earth vortex
Z - axis of rotation of the earth vortex
e - a side view of the plane of the Earth's gravitational vortex
M - a side view of the orbital plane of the Moon
i - the angle of deviation of the lunar orbital plane (m) at the top of the semi-minor axis of the plane of the earth's vortex (e).

III. Dynamics of the Moon

On the basis of astronomical data [1], we define the Earth's gravitational force and the centrifugal force acting on the Moon in the semi-minor axis.

Astronomical parameters of the orbital motion of the Moon:

Perigee EP = 363.1 x 10^6 m
Apogee EA = 405,7 x 10^6 m

© 2014 Global Journals Inc. (US)

Semimajor axis a = 384,4 x 10^6 m
Eccentricity e = 0.0549

Orbital velocity of the Moon at apogee Va = 970 m / c
Semi-minor axis b = a $(1- e2)^{1/2}$ = 384,4 x $(1 - 0.05492)^{1/2}$ = 383.8 x 106 m
The strength of the Earth's gravity on the surface of Fe = 9,78 m
Radius of the Earth - Re = 6,371 x 106 m
The radius of the Moon - Rm = 1,7 x 106 m

The radius of curvature of the orbit of the moon at the top of semi-minor axis

$$R = a^2/b = (384,4 + 6,371)^2/(383,8 + 6,371) = 391,4 \text{ x } 10^6 \text{ M}$$

The distance from the center of the Earth to the semi-minor axis

$$R^2_{eb} = \{(a + R_e + R_m) - (ER + R_e + R_m)\}^2 + (b + R_e + R_m)^2 =$$

$$= \{(384,4 + 6,371 + 1,7) - (363,1 + 6,371 + 1,7)\}^2 + (383,8 + 6,371 + 1,7)^2$$

$$R_{eb} = 392,4 \text{ x } 10^6 \text{ m}$$

We define the Earth's gravitational force acting on the Moon (F_{eb}), at the top of the semi-minor axis. The calculations are performed in accordance with the equation of universal gravitation Newton. For this we use the inverse square law.

$$F_e / F_{em} = R^2_{eb} / R^2_e \quad \text{where}$$

$$F_e = 9,78 \text{ m}, \qquad \text{then}$$

$$F_{eb} = 2,58 \text{ x } 10^{-3} \text{ m}$$

We define the orbital velocity of the moon at the top of semi-minor axis V_b, on the basis of the 2nd law of Kepler

$$EA / R_{eb} = V_b / V_a \quad \text{where}$$

$$V_b = 1003 \text{ m / c}$$

We define the centrifugal force acting on the Moon in the semi-minor axis

$$F_c = m\, v^2_b / R = 2,57 \text{ x } 10^{-3} \text{ m}$$

On the basis of the classical theory of gravitation that the force due to gravity of the moon is greater than the centrifugal force acting on the satellite. Therefore, using the equations of Newton or Einstein's impossible to determine the reason for removing the orbit of the Moon According to the theory of vortex gravitation, the Moon's orbit deviates from the central orbit the Earth's gravitational vortex. The magnitude of this deviation (i) defined by equation (8).

$$\cos i = b/a = 383,4 \text{ x } 10^6 / 384,4 \text{ x } 10^6 = 0,9974 \quad \text{where } i = 6 \text{ degree}$$

With this rejection of the Earth's gravitational force at the top of semi-minor axis of the lunar orbit is reduced in accordance with equation (7).

$$F_v = F_g \cos^3 i = F_{em} \cos^3 i = 2,578 \text{ x } 10^{-3} \text{ x } 0,9974^3 = 2,56 \text{ x } 10^{-3} \text{ m} \qquad (9)$$

Therefore, based on the theory of vortex gravitation, it is clear that at the top of semi-minor axis of the lunar orbit centrifugal force in its magnitude exceeds the vortex gravitation. But this is an incomplete analysis of the motion of the moon.

IV. Cosmology Moon

Calculations in Chapter 3 show the reason for removing the moon at the moment. But there are more questions - when and why began removing the moon?

These questions can be answered on the basis of the laws of vortex cosmogony and celestial mechanics.

Each celestial body is generated by cosmic etheric vortex. Mass of a celestial object in the initial moment of time is equal to the mass of ether torsion. During the whole period of its existence the weight of his body constantly increased depending on the strength of the vortex gravitation.

Note 1: Since the vortex gravitation force has always been the same, then the increase in mass of a celestial body in each year of its existence came to the same value.

Mass of the Moon (M), the radius of the orbit of its revolution around the Earth (R) and the orbital speed of its movement (V) binds the law of conservation of momentum of rotation of the body.

$$M \times R \times V = \text{const} \qquad (10)$$

Consider the simplified mass change of the moon. We represent the change in each physical parameter in equation (10) in the form of coefficients - Km, Kr, Kv. These coefficients based on equation (10) are linked:

© 2014 Global Journals Inc. (US)

$$K_m \times Kr \times K_v = 1 \qquad (11)$$

According to Kepler's law $\boldsymbol{V} \sim \frac{\mathbf{1}}{\sqrt{\boldsymbol{R}}}$ can be written

$$K_v = \frac{1}{\sqrt{K_r}} \qquad (12)$$

Substituting (12) and (11)

$$K_r = \frac{1}{{K_m}^2} \qquad (13)$$

Therefore, the moon in the radial direction, there are three permanent force vector:

1. The strength of the vortex gravitation.
2. Radial force action for conservation of angular momentum of the Moon around the Earth.
3. centrifugal force.

At the moment there is a removal of the lunar orbit. Therefore, the centrifugal force (III) in its magnitude exceeds the vector sum of the forces (I) and (II). But it was not always. In the initial period of the moon her weight was negligible, therefore, the relative increase in its Km - maximum. Then, based on equation (13) Moon should be close to the Earth. With the constant increase in the mass of the moon decreases its relative gain Km. Decreases with decreasing Km annual approximation of the lunar orbit to the Earth - Kr. At some point the total mega historical value forces (I) and (II) became equal in absolute value to the centrifugal force - (III). Moon orbit stabilized at this moment, the movement of the moon in the radial direction has stopped. A further decrease in Km, respectively reduce the total attraction forces (I) and (II). Therefore, the centrifugal force exceeded the force (see. Chapter 3). Began removing the Moon from the Earth.

Based on these formulas define the dynamic characteristics of the moon.

The main physical parameters of the Moon:

mass $M_m = 7{,}3 \times 10^{22}$ kg

- The age of $T = 4{,}5 \times 10^9$ years
- The distance from the Earth to the semi-minor axis of the lunar orbit $R_b = 392{,}4 \times 10^6$ m
- Annual increase in orbit radius $\Delta R = 3{,}8 \times 10^{-2}\mathrm{m}$

We define on the basis of notes 1 annual increase in mass of the Moon

$$\Delta M = M_m/T = 7{,}3 \times 10^{22} / 4{,}5 \times 10^9 = 1{,}6 \times 10^{13} \text{ kg}$$

The relative increase in weight

$$K_m = \Delta M / M_m = 1{,}6 \times 10^{13} / 7{,}3 \times 10^{22} = 2{,}2 \times 10^{-10} \quad \text{or} \quad K^2_m = 1 + 4{,}4 \times 10^{-10}$$

The relative increase in mass causes a relative decrease in the radius of the lunar orbit on the basis of formula (13):

$$K_r = \frac{1}{{K_m}^2} = \frac{1}{1 + 4{,}4 \times 10^{-10}} = 1 - 4{,}4 \times 10^{-10}$$

We define the absolute value of the decrease in the radius of the lunar orbit by the force II:

$$\Delta R_{II} = R_b \times K_r = 392{,}4 \times 10^6 \times 4{,}4 \times 10^{-10} = 17{,}3 \times 10^{-2} m$$

Then the increase in the radius of the orbit of the interplay of forces I and III ($\Delta \boldsymbol{R}_{\boldsymbol{I+III}}$) must be:

$$\Delta R_{I+III} = \Delta R + \Delta R_{II} = 3{,}8 \times 10^{-2} + 17{,}3 \times 10^{-2} = 21{,}1 \times 10^{-2}\mathrm{m}$$

He magnitude $\Delta \boldsymbol{R}_{\boldsymbol{I+III}}$ constant. Consequently, when the variable of Strength II is the vector sum of the forces I and III, the radius of the Moon's orbit is not changed.

$$\Delta R_{II_0} = -\Delta R_{I+III} = \pm 21{,}1 \times 10^{-2} m \quad \text{or} \quad \Delta R_0 = 0$$

Calculate the physical parameters of the moon at this time (in a stable orbit). With an absolute decrease in the radius by an amount $\Delta \boldsymbol{R}_{\boldsymbol{II_0}}$, the relative decrease in the radius of the orbit of the force II power.

$$K_{r0} = \frac{\Delta R_{II_0}}{R} = \frac{21{,}1 \times 10^{-2}}{392{,}4 \times 10^6} = 5{,}38 \times 10^{-10}$$

According to formula (13), the relative decrease in the radius of the orbit $\boldsymbol{K_{r0}}$ be invoked relative increase in the mass of the moon the size of

$$K_{m0} = \frac{1}{\sqrt{K_{r0}}} = \frac{1}{\sqrt{1+5{,}38\times10^{-10}}} = 1 - 2{,}69 \times 10^{-10}$$

Determine the mass of the moon at $K_{m0} = 2{,}69 \times 10^{-10}$ that is in a stable orbit

$$M_0 = \frac{\Delta M}{K_{m0}} = \frac{1{,}6 \times 10^{13}}{2{,}69 \times 10^{-10}} = 5{,}95 \times 10^{22}\mathrm{m}$$

Mass M_0 Moon should be aged

$$T = \frac{M_0}{\Delta M} = \frac{5{,}95 \times 10^{22}}{1{,}6 \times 10^{13}} = 3{,}7 \times 10^9 \text{years}$$

Thus, removal of the moon started 800 million years ago. Since removal of the orbit must be accelerated, then 800 million years ago was Moon orbit closer to the earth is not more than 16 000 km and had approximate radii:

© 2014 Global Journals Inc. (US)

- Perigee - 347 000 km
- The apogee - 390,000 km

In the future, through the 1 billion years, the radius of the moon's orbit will be increased by 14 cm per year. Overall increase in orbit during this time will be no more than 90 thousand km.

V. Rotation of the Moon

Any astronomical reference indicate that the moon rotates around its axis. During one revolution of rotation coincides with the turnover of the Moon around the Earth. Therefore, the Moon is directed by an observer on earth is always on one side.

Objectively, any movement (rotation) can be considered only in the relative valuation. Indeed, in the coordinates of the world round the moon rotates on its axis, but in geocentric coordinates, that is, with respect to its orbit or the surface of the Earth the Moon does not rotate.

This anomaly is explained by the law of conservation of angular momentum of rotation.

Increasing the mass of the moon, accompanied by an increase in its radius. Then on the basis of equation (10) the rate of rotation of the Moon around its axis must decrease. It is clear that to date rate of rotation of the Moon should be minimal. But the moon is now ceased to rotate about its orbit and the Earth's surface. This fact is explained by the fact that the density of the moon or the height of the relief of its surface uniform. At the most dense or high part of her body to a maximal force of gravity on the Earth that orbit than other segments of the moon. At low speed and force of inertia of the Moon's rotation, this dense, or the highest part, at the time, was unable to overcome the force of gravity (continue rotation) and remained "fixed" at a very close distance from our planet. That is, this part of the moon forever "tied" the earth's gravity on our side.
Therefore, the moon ceased to rotate relative to its orbit.

VI. Conclusion

Above presented calculations of the dynamics of the moon give reason to conclude that the majority of the celestial objects in the universe perform similar radial displacement.

All of the body or system of bodies in space are satellites of other cosmic torsion. Turning on the orbits of the gravitation torsion, every body constantly increases its mass. Depending on the inclination of the orbit to the plane of the torsion of their age and the celestial bodies get the opposite radial directions. The greater the slope and the age of the space object, the greater the likelihood that it is removed from the center of its space systems. If you contact any of the gravitational plane torsion, without inclination of the orbit, the space object approaches the center of the torsion bar.

Similar conclusions apply to all known space objects. Galaxies can approach the center of the universe, and can be removed. Similarly, the dynamic properties of stars appear in any galaxy or planets when handling around any star, etc.

Therefore, the removal of galaxies from each other is not evidence of expansion of the universe.

References Références Referencias

1. *M. Chapront-Touzé, J. Chapront (1983). «The lunar ephemeris ELP-2000». Astronomy & Astrophysics 124: 54.* Bibcode: 1983A&A...124...50C.
2. Jean O. Dickey et al. (1994): «Lunar Laser Ranging: a Continuing Legacy of the Apollo Program». Science 265, 482..490 .
3. S. Orlov. *Foundation of vortex gravitation, cosmology and cosmogony.* Global journal of science Frontier research. Physic and Space Science. Volume 12 issue 1 Version 1.0 January 2012
4. V. A. Atsurovskiy. *General ether-dynamics*. Energoatomizdat. Moscow, Russia. 1990. Page 278.

© 2014 Global Journals Inc. (US)

Global Journal of Science Frontier Research: A
Physics and Space Science
Volume 14 Issue 6 Version 1.0 Year 2014
Type : Double Blind Peer Reviewed International Research Journal
Publisher: Global Journals Inc. (USA)
Online ISSN: 2249-4626 & Print ISSN: 0975-5896

Theory of Shubnikov-De Haas and Quantum Hall Oscillations in Graphene under Bias and Gate Voltages

By Shigeji Fujita & Akira Suzuki
State University of New York, United States

Abstract- Magnetic oscillations in graphene under gate and bias voltages, measured by Tan et al. [Phys. Rev. B **84**, 115429 (2011)] are analyzed theoretically. The Shubnikov-de Haas (SdH) oscillations occur at the lower fields while the Quantum Hall (QH) oscillations occur at the higher fields. Both SdH and QH oscillations have the same periods: $\varepsilon_{\rm F}/\hbar\omega_{\rm c}$, where $\varepsilon_{\rm F}$ is the Fermi energy and $\omega_{\rm c}$ the cyclotron frequency. Since the phases are different by $\pi/2$, transitions between the maxima and the minima occur at some magnetic field strength. A quantum statistical theory of the SdH oscillations is developed. A distinctive feature of two dimensional (2D) magnetic oscillations is the absence of the background. That is, the envelopes of the oscillations approach zero with a zero-slope central line. The amplitude of the SdH oscillations decreases like $[\sinh(2\pi^2 M^* k_{\rm B}T/\hbar eB)]^{-1}$, where M^* is the magnetotransport mass of the field-dressed electron distinct from the cyclotron mass m^* of the electron. A theory of the QHE is developed in terms of the composite (c)-bosons and c-fermions. The half-integer QHE in graphene at filling factor $\nu = (2P+1)/2,\ P = 0, \pm 1, \pm 2, \cdots$ arises from the Bose-Einstein condensation of the c-bosons formed by the phonon exchange between a pair of like-charge c-fermions with two fluxons.

Keywords: *Shubnikov-de Haas (SdH) oscillation, quantum Hall (QH) oscillation, 2D magnetic oscillation, composite (c-) fermion, c-boson, fluxon, Cooper pair (pairon), magnetotransport mass, cyclotron mass.*

GJSFR-A Classification : *FOR Code: 020699p*

THEORYOFSHUBNIKOVDEHAASANDQUANTUMHALLOSCILLATIONSINGRAPHENEUNDERBIASANDGATEVOLTAGES

Strictly as per the compliance and regulations of :

© 2014. Shigeji Fujita & Akira Suzuki. This is a research/review paper, distributed under the terms of the Creative Commons Attribution-Noncommercial 3.0 Unported License http://creativecommons.org/licenses/by-nc/3.0/), permitting all non commercial use, distribution, and reproduction in any medium, provided the original work is properly cited.

Theory of Shubnikov-De Haas and Quantum Hall Oscillations in Graphene under Bias and Gate Voltages

Shigeji Fujita [α] & Akira Suzuki [σ]

Abstract- Magnetic oscillations in graphene under gate and bias voltages, measured by Tan et al. [Phys. Rev. B84, 115429 (2011)] are analyzed theoretically. The Shubnikov - de Haas (SdH) oscillations occur at the lower fields while the Quantum Hall (QH) oscillations occur at the higher fields. Both SdH and QH oscillations have the same periods: $\varepsilon_{\mathrm{F}}/\hbar\omega_{\mathrm{c}}$, where ε_{F} is the Fermi energy and ω_{c} the cyclotron frequency. Since the phases are different by π/2, transitions between the maxima and the minima occur at some magnetic field strength. A quantum statistical theory of the SdH oscillations is developed. A distinctive feature of two dimensional (2D) magnetic oscillations is the absence of the background. That is, the envelopes of the oscillations approach zero with zero-slope central line. The amplitude of the SdH oscillations decreases like $[\sinh(2\pi^2 M^* k_{\mathrm{B}}T/\hbar eB)]^{-1}$, where M^* is the magnetotransport mass of the field-dressed electron distinct from the cyclotron mass m^* of the electron. A theory of the QHE is developed in terms of the composite (c)-bosons and c-fermions. The half integer QHE in graphene at filling factor $\nu=(2P+1)/2,\ P=0,\pm1,\pm2,\cdots$ arises from the Bose-Einstein condensation of the c-bosons formed by the phonon exchange between a pair of like-charge c-fermions with two fluxons. The QH states are bound and stabilized with a superconducting energy gap. They are more difficult to destroy than the SdH states. The temperature dependence of the magnetic resistance between 2 K and 50 K is interpreted, using the population change of phonons (scatterers).

PACS numbers: 05.20.Dd, 72.80.Vp, 73.43.Qt, 73.43.-f, 73.50.Fq.

Keywords: Shubnikov-de Haas (SdH) oscillation, quantum Hall (QH) oscillation, 2D magnetic oscillation, composite (c-) fermion, c-boson, fluxon, Cooper pair (pairon), magnetotransport mass, cyclotron mass.

I. Introduction

In 2011 Tan *et al.* [1] discovered a phase inversion of the magnetic oscillations in graphene under the gate voltage $V_{\mathrm{g}} = -40$ V at 2.0 K. At lower fields ($B < 2$ T) the magnetic resistance R_{xx} has a negligible dependence on dc bias while R_{xx} at higher fields show temperature - dependent damping oscillations. Their data are shown in Fig. 1. The original authors considered the Shubnikov-de Haas (SdH) oscillations only. It is more natural to interpret the data in terms of the SdH oscillations at lower fields and the quantum Hall (QH) oscillations at higher fields. The SdH oscillations originates in the sinusoidal oscillations within the drop in the Fermi distribution function of electrons (see Fig. 2). At low temperatures $(k_{\mathrm{B}}T \ll \varepsilon_{\mathrm{F}}, T \sim 2\,\mathrm{K})$ and low fields, where the Fermi energy ε_{F} is much greater than the the cyclotron frequency $\omega_{\mathrm{c}} \equiv eB/m^*$, the SdH oscillations are visible. The dc bias negligibly affects the Fermi energy ε_{F}, and hence the resistance remains flat. A distinctive feature of 2D magnetic oscillations is the absence of the background. That is, the envelopes of the oscillations approach zero with a zero-slope central line. This feature is clearly seen in Fig. 1. Fujita and Suzuki described this feature in their book [2]. For completeness their theory is outlined in Appendix A. A theory of the SdH oscillations in 2D is given in Section II. Following Fujita and Okamura [3], we develop a quantum statistical theory of the QHE in terms of composite particles (boson, fermion) in Section III. A discussion is given in Section IV.

Author α: Department of Physics, University at Buffalo, State University of New York, Buffalo, USA. e-mail: fujita@buffalo.edu

Author σ: Department of Physics, Faculty of Science, Tokyo University of Science, Shinjyuku-ku, Tokyo, Japan.

e-mail: asuzuki@rs.kagu.tus.ac.jp

© 2014 Global Journals Inc. (US)

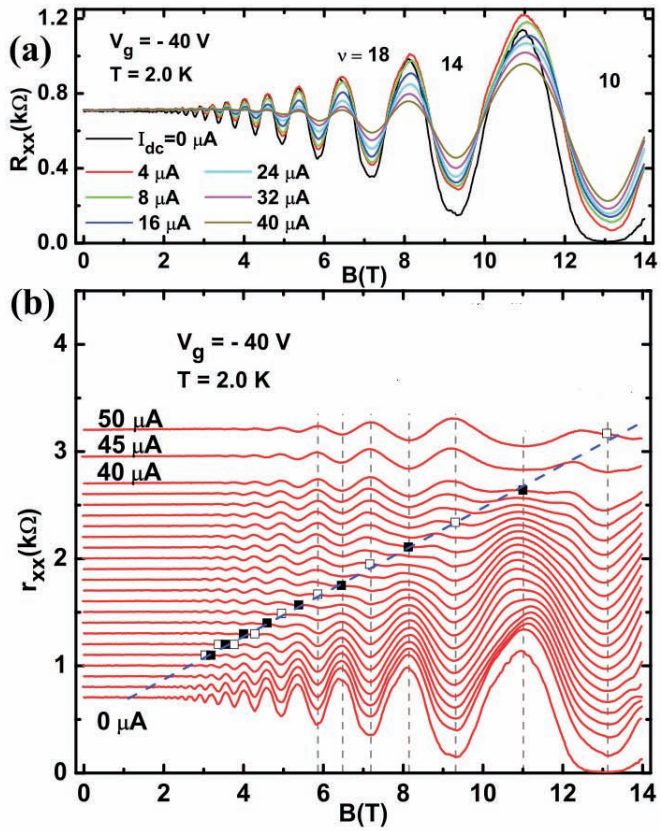

Figure 1 : (Color online) (a) The magnetic resistance R_{xx} measured at the gate voltage $V_g = -40\,\mathrm{V}$ and the temperature T∼2.0 K at various bias-induced currents. (b) The differential magnetic resistance r_{xx}. The inversion is marked by vertical dash lines (after Tan *et al.* [1]).

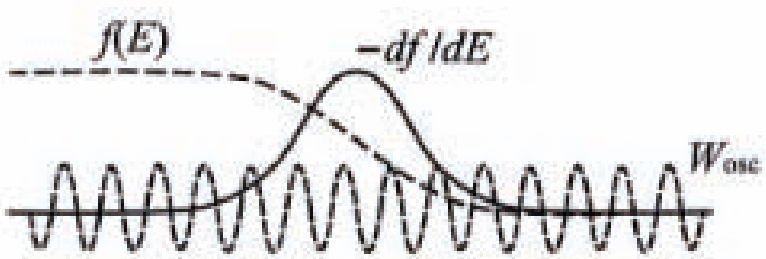

Figure 2 : Numerous oscillations in $\mathcal{W}_{\mathrm{osc}}$ within the width of $-\mathrm{d}f/\mathrm{d}\varepsilon$ generates SdH oscillations.

II. Shubnikov-De Haas Oscillations

Oscillations in magnetoresistance (MR), similar to the de Haas-van Alphen (dHvA) oscillations in the magnetic susceptibility, were first observed by Shubnikov and de Haas in 1930 [4]. These oscillations are often called the SdH oscillations. The susceptibility is an equilibrium property and can therefore be calculated by standard statistical mechanical methods. The MR is a non-equilibrium property, and its treatment requires a kinetic theory. The magnetic oscillations in both cases arise from the periodically varying density of states for the electrons subjected to magnetic fields. We shall see that the observation of the oscillations gives a direct measurement of the *magnetotransport mass* M^*. The observation also gives the quantitative information on the *cyclotron mass* m^*.

© 2014 Global Journals Inc. (US)

Let us take a system of electrons moving in a plane. Applying a magnetic field $\boldsymbol{B}$ perpendicular to the plane, each electron will be in the Landau state with the energy ε:

$$\varepsilon = \left(N_{\rm L} + \frac{1}{2}\right)\hbar\omega_{\rm c}, \quad \omega_{\rm c} \equiv \frac{eB}{m^*}, \quad N_{\rm L} = 0, 1, 2, \ldots \quad (1)$$

The degeneracy of the Landau level (LL) is given by

$$\frac{eBA}{2\pi\hbar}, \qquad A = \text{sample area}. \quad (2)$$

The weaker is the field, the more LL's, separated by $\hbar\omega_{\rm c}$, are occupied by the electrons. In this Landau state the electron can be viewed as circulating around the guiding center. The radius of circulation $l \equiv (\hbar/eB)^{1/2}$ for the Landau ground state is about 250 Å at a field $B =$ 1.0 T (tesla). If we now apply a weak electric field E, then the guiding center jumps and generates a current.

Let us first consider the case with no magnetic field. We assume a uniform distribution of impurities with the density $n_{\rm I}$. Solving the Boltzmann equation, we obtain the conductivity:

$$\sigma = \frac{e^2}{m^*} n\tau = \frac{2e^2}{m^*(2\pi\hbar)^2} \int {\rm d}^2p \, \frac{\varepsilon}{\Gamma} \left(-\frac{{\rm d}f}{{\rm d}\varepsilon}\right), \quad \varepsilon = \frac{p^2}{2m^*}, \quad (3)$$

where $n =$ electron density, and Γ is the energy (ε)-dependent relaxation rate:

$$\Gamma(\varepsilon) = n_{\rm I} \int {\rm d}\Omega \left(\frac{p}{m^*}\right) I(p, \theta)(1 - \cos\theta), \quad (4)$$

where $\theta =$ scattering angle and $I(p, \theta) =$ scattering cross-section, and the Fermi distribution function:

$$f(\varepsilon) \equiv \frac{1}{e^{\beta(\varepsilon-\mu)} + 1} \quad (5)$$

with $\beta \equiv (k_{\rm B}T)^{-1}$ and $\mu =$ chemical potential, is normalized such that

$$n = \frac{2}{(2\pi\hbar)^2} \int {\rm d}^2p \, f(\varepsilon), \quad (6)$$

where the factor 2 is due to the spin degeneracy. We introduce the density of states, $\mathcal{D}(\varepsilon)$, such that

$$\frac{2}{(2\pi\hbar)^2} \int {\rm d}^2p \cdots = \int {\rm d}\varepsilon \, \mathcal{D}(\varepsilon) \cdots. \quad (7)$$

We can then rewrite Eq.(3) as

$$\sigma = \frac{e^2}{m^*} \int_0^\infty {\rm d}\varepsilon \, \mathcal{D}(\varepsilon) \, \frac{\varepsilon}{\Gamma} \left(-\frac{{\rm d}f}{{\rm d}\varepsilon}\right). \quad (8)$$

The Fermi distribution function $f(\varepsilon)$ drops steeply near $\varepsilon = \mu$ at low temperatures:

$$k_{\rm B}T \ll \varepsilon_{\rm F}. \quad (9)$$

The density of states, $\mathcal{D}(\varepsilon)$, is a slowly varying function of the energy ε. For a 2D free electron system, the density of states is independent of the energy ε. Then the Dirac delta-function replacement formula

$$-\frac{{\rm d}f}{{\rm d}\varepsilon} = \delta(\varepsilon - \mu) \quad (10)$$

can be used. Assuming this formula, using

$$\int_0^\infty {\rm d}\varepsilon \, \mathcal{D}(\varepsilon) \, \varepsilon \left(-\frac{{\rm d}f}{{\rm d}\varepsilon}\right) = \int_0^\infty {\rm d}\varepsilon \, \mathcal{D}(\varepsilon) \, f(\varepsilon), \quad (11)$$

and comparing Eq. (3) and Eq. (8), we obtain

$$\tau = \int_0^\infty {\rm d}\varepsilon \, \mathcal{D}(\varepsilon) \, \frac{1}{\Gamma(\varepsilon)} \, f(\varepsilon) \quad (12)$$

for the relaxation time τ. The temperature dependence of τ is introduced through the Fermi distribution function $f(\varepsilon)$.

Next we consider the case with a magnetic field. A classical electron spirals around the applied static magnetic field $\boldsymbol{B}$. The guiding center motion generates an electric current. The spiraling state has a lower energy than the straight line motion state since the current runs in a diamagnetic manner.

Following Onsager [5], we assume that the magnetic field magnitude B is quantized such that

$$B = n_\phi \Phi_0, \quad n_\phi \equiv \frac{N_\phi}{A}, \quad \Phi_0 = \frac{e}{\hbar}, \quad (13)$$

where N_ϕ is the number of *elementary fluxes (fluxons)*. Following Jain [6], we introduce field-dressed (attached) electrons, which can move straight in all directions (isotropically) in the absence of an electric field. The dressed electron by assumption has a charge magnitude e and a magnetotransport mass M^* distinct from the cyclotron mass m^*. Applying kinetic theory to the motion of the dressed electrons, we shall obtain the conductivity formula

© 2014 Global Journals Inc. (US)

$$\sigma = e^2 n\tau/M^* \,. \tag{14}$$

We introduce *kinetic momenta* $\boldsymbol{\Pi}$:

$$\Pi_x \equiv p_x + eA_x \,, \quad \Pi_y \equiv p_y + eA_y \,. \tag{15}$$

The kinetic energy is

$$\mathcal{H}_{\rm K} = \frac{1}{2M^*}(\Pi_x^2 + \Pi_y^2) \equiv \frac{1}{2M^*}\Pi^2 \,. \tag{16}$$

After simple calculations, we obtain

$$\mathrm{d}x\mathrm{d}\Pi_x\mathrm{d}y\mathrm{d}\Pi_y \equiv \mathrm{d}x\mathrm{d}p_x\mathrm{d}y\mathrm{d}p_y \,. \tag{17}$$

We can now represent quantum states by the quasi-phase space elements $\mathrm{d}x\mathrm{d}\Pi_x\mathrm{d}y\mathrm{d}\Pi_y$. The Hamiltonian $\mathcal{H}$ in Eq. (16) does not depend on the position (x, y). Assuming large

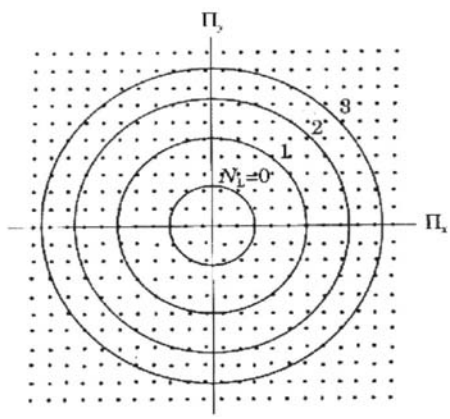

Figure 3 : The 2D Landau states are represented by the circular shells in the $\Pi_x\Pi_y$-space.

normalization lengths (L_x, L_y), $A = L_x L_y$, we can then represent the Landau states by the concentric shells in the $\Pi_x\Pi_y$-space (see Fig. 3), having the statistical weight

$$\frac{2\pi L_x L_y}{(2\pi\hbar)^2}\Pi\Delta\Pi = \frac{A}{2\pi\hbar}\omega_{\rm c} m^* = \frac{eAB}{2\pi\hbar} \tag{18}$$

with the energy separation $\hbar\omega_{\rm c} = \Delta(\Pi^2/2m^*) = \Pi\Delta\Pi/m^*$. Equations (18) confirm that the LL degeneracy is $eBA/(2\pi\hbar)$ as stated in Eq. (2).

Let us introduce a distribution function $\varphi(\boldsymbol{\Pi}, t)$ in the $\Pi_x\Pi_y$-space normalized such that

$$\frac{2}{(2\pi\hbar)^2}\int \mathrm{d}^2\,\Pi\;\varphi(\Pi_x, \Pi_y, t) = \frac{N}{A} = n \,. \tag{19}$$

The Boltzmann equation for a homogeneous stationary system is

$$e(\boldsymbol{E} + \boldsymbol{v}\times\boldsymbol{B})\cdot\frac{\partial\varphi}{\partial\boldsymbol{\Pi}} = \int \mathrm{d}\Omega\,\frac{\Pi}{M^*}\,n_{\rm I}\,I(\Pi,\theta)\,[\varphi(\boldsymbol{\Pi}') - \varphi(\boldsymbol{\Pi})] \,, \tag{20}$$

where θ is the angle of deflection, that is, the angle between the initial and final kinetic momenta $(\boldsymbol{\Pi}, \boldsymbol{\Pi}')$. In the actual experimental condition the magnetic force term can be neglected. Assuming this condition, we obtain the same Boltzmann equation as that for a field-free system. Hence, we obtain the conductivity formula (14) (with m^* being replaced by M^*).

As the field B is raised, the separation $\hbar\omega_{\rm c}$ becomes greater and the quantum states are bunched together. The density of states should contain an oscillatory part:

$$\sin\left(\frac{2\pi\varepsilon'}{\hbar\omega_{\rm c}} + \phi_0\right) \,, \qquad \varepsilon' = \frac{\Pi'^2}{2m^*} \,, \tag{21}$$

where ϕ_0 is a phase. Since

$$\varepsilon_{\rm F}/\hbar\omega_{\rm c} \gg 1 \qquad (\text{weak field}) \,, \tag{22}$$

the phase ϕ_0 will be dropped hereafter. Physically, the sinusoidal variations in Eq. (21) arise as follows. From the Heisenberg uncertainty principle and the Pauli exclusion principle, the Fermi energy $\varepsilon_{\rm F}$ remains approximately constant as the field B varies. The density of states is high when $\varepsilon_{\rm F}$ matches the $N_{\rm L}$-th level, while it is small when $\varepsilon_{\rm F}$ falls between neighboring LL's.

If the density of states, $\mathcal{D}(\varepsilon)$, oscillates violently in the drop of the Fermi distribution function $f(\varepsilon) \equiv [e^{\beta(\varepsilon-\mu)} + 1]^{-1}$, one cannot use the delta function replacement formula in Eq. (10). The use of Eq. (10) is limited to the case in which the integrand is a smooth function near $\varepsilon = \mu$. The width of $|\mathrm{d}f/\mathrm{d}\varepsilon|$ is of the order $k_{\rm B}T$. The critical temperature $T_{\rm c}$ below which the oscillations can be observed is $k_{\rm B}T_{\rm c} \sim \hbar\omega_{\rm c}$. Below the critical temperature, $T < T_{\rm c}$, we may proceed as follows. Let us consider the integral

$$I = \int_0^\infty \mathrm{d}\varepsilon\, f(\varepsilon)\,\sin\left(\frac{2\pi\varepsilon}{\hbar\omega_{\rm c}}\right) \qquad \varepsilon \equiv \frac{\Pi^2}{2M^*} \,. \tag{23}$$

© 2014 Global Journals Inc. (US)

For temperatures satisfying $\beta\varepsilon = \varepsilon/k_{\rm B}T \gg 1$, we obtain straightforwardly

$$I = \pi k_{\rm B}T \frac{\cos(2\pi\varepsilon_{\rm F}/\hbar\omega_{\rm c})}{\sinh(2\pi^2 M^* k_{\rm B}T/\hbar eB)} \,. \qquad (24)$$

Here we used

$$M^*\mu(T=0) = m^*\varepsilon_{\rm F} = \frac{1}{2}p_{\rm F}^2 \,, \qquad (25)$$

which follows from the fact that the Fermi momentum $p_{\rm F}$ is the same for both dressed and undressed electrons. The mathematical steps going from Eq. (23) to Eq. (24) are given in Appendix B.

In summary, (i) the SdH oscillation period is $\varepsilon_{\rm F}/\hbar\omega_{\rm c}$. This arises from the bunching of the quantum states. (ii) The amplitude of the oscillations exponentially decreases like $[\sinh(2\pi^2 M^* k_{\rm B}T/\hbar eB)]^{-1}$. Thus, if the "decay rate" δ defined through

$$\sinh\left(\frac{\delta}{B}\right) \equiv \sinh\left(\frac{2\pi^2 M^* k_{\rm B}T}{\hbar eB}\right) \qquad (26)$$

is measured carefully, the magnetotransport mass M^* can be obtained *directly* through $M^* = e\hbar\delta/(2\pi^2 k_{\rm B}T)$. This finding is important. For example, the relaxation rate τ^{-1} can now be obtained through the conductivity formula (14) with the measured magnetoconductivity.

All electrons, not just those excited electrons near the Fermi surface, are subject to the $\boldsymbol{E}$-field. Hence, the carrier density n appearing in Eq. (14) is the *total* density of the dressed electrons. This *n* also appears in the Hall resistivity expression:

$$\rho_{\rm H} \equiv \frac{E_{\rm H}}{j} = \frac{v_{\rm d}B}{env_{\rm d}} = \frac{B}{en} \,, \qquad (27)$$

where the Hall effect condition $E_{\rm H} = v_{\rm d}B$, $v_{\rm d}$ = drift velocity, was used.

In the *cyclotron motion* the electron with the cyclotron mass m^* circulates around the magnetic field. Hence, the cyclotron frequency $\omega_{\rm c}$ is given by eB/m^*. The guiding center (dressed electron) moves with the magnetotransport mass M^*, whence this M^* appears in the hyperbolicsine term in Eq. (24).

In 1952 Dingle [7] developed a theory of the dHvA oscillations. He proposed to explain the envelope behavior in terms of a Dingle temperature $T_{\rm D}$ such that the exponential decay factor be

$$\exp\left[\frac{-\lambda(T+T_{\rm D})}{B}\right], \qquad \lambda = \text{constant}. \qquad (28)$$

Instead of the Dingle temperature, we introduced the magnetotransport mass M^* to explain the envelope behavior. The susceptibility χ is an equilibrium property, and hence, χ can be calculated without considering the relaxation mechanism. In our theory, the envelope of the oscillations is obtained by taking the average of the sinusoidal density of states with the Fermi distribution of the dressed electrons. There is no place where the impurities come into play. The validity of our theory may be checked by varying the impurity density. Our theory predicts little change in the clearly defined envelope.

The SdH oscillations are a fermionic phenomenon while the QH oscillations are a bosonic one with a superconducting energy gap, which will be discussed in the following section.

III. Fractinal Quantum Hall Effect

The fractional QHE can be treated in terms of composite (c-) particles (boson, fermion). The c-boson (c-fermion), each containing an electron and an odd (even) number of fluxons, were introduced by Zhang *et al*. [8] and Jain [6] for the description of the fractional QHE (Fermi liquid).

There is a remarkable similarity between the QHE *and* the High-Temperature Superconductivity (HTSC), both occurring in two-dimensional (2D) systems as pointed out by Laughlin [9]. We regard the *phonon exchange attraction* as the causes of both QHE and HTSC. Starting with a reasonable Hamiltonian, we calculate everything, using quantum statistical method.

The countability concept of the fluxons, known as the *flux quantization*:

$$B = \frac{N_\phi}{A}\frac{h}{e} \equiv n_\phi \frac{h}{e} \,, \qquad (29)$$

where N_ϕ = fluxon number (integer) and h = Planck constant, is originally due to Onsager [5]. The magnetic (electric) field is an axial (polar) vector and the associated fluxon (photon) is a half-spin fermion (full-spin boson). The magnetic (electric) flux line cannot (can) terminate at a sink, which supports the fermionic (bosonic) nature of the fluxon (photon). No half-spin fermion can annihilate itself because of angular momentum conservation. The electron spin originates in the relativistic quantum equation (Dirac's theory of electron) [10]. The discrete (two) quantum numbers ($\sigma_z = \pm 1$) cannot change in the continuous limit, and hence the spin must be conserved. The countability and statistics of the fluxon are fundamental particle properties. We postulate that *the fluxon is a half-spin fermion with zero mass and zero charge*. Fluxons are similar to neutrinos. The fluxon (neutrino) occurs in electron (nucleon) dynamics. Hence fluxon and neutrino are regarded as distinct from each other.

The Center-of-Mass (CM) of *any* c-particle moves as a fermion or a boson. The eigenvalues of the CM momentum are limited to 0 or 1 (unlimited) if it contains an odd (even) number of elementary fermions. This rule is known as the *Ehrenfest-Oppenheimer-Bethe's (EOB's) rule* [11]. Hence the CM motion of the composite containing an electron and Q fluxons is bosonic (fermonic) if Q is odd (even). The system of c-bosons condenses below some critical temperature $T_{\rm c}$

© 2014 Global Journals Inc. (US)

and exhibits a superconducting state while the system of c-fermions shows a Fermi liquid behavior.

A longitudinal phonon, acoustic or optical, generates a density wave, which affects the electron (fluxon) motion through the charge displacement (current). The exchange of a phonon between electrons and fluxons can generate an *attractive* transition, see below.

Bardeen, Cooper and Schrieffer (BCS) [12] assumed the existence of Cooper pairs [13] in a superconductor, and wrote down a Hamiltonian containing the "electron" and "hole" kinetic energies and the pairing interaction Hamiltonian with the phonon variables eliminated. We start with a BCS-like Hamiltonian $\mathcal{H}$ for the QHE[3]:

$$\begin{aligned}\mathcal{H} = &\sum_{\boldsymbol{k}}{}' \sum_{s} \varepsilon_{\boldsymbol{k}}^{(1)} n_{\boldsymbol{k}s}^{(1)} + \sum_{\boldsymbol{k}}{}' \sum_{s} \varepsilon_{\boldsymbol{k}}^{(2)} n_{\boldsymbol{k}s}^{(2)} + \sum_{\boldsymbol{k}}{}' \sum_{s} \varepsilon_{\boldsymbol{k}}^{(3)} n_{\boldsymbol{k}s}^{(3)} \\ &- \sum_{\boldsymbol{q}}{}' \sum_{\boldsymbol{k}}{}' \sum_{\boldsymbol{k}'}{}' \sum_{s} v_0 \left[B_{\boldsymbol{k}'\boldsymbol{q}\,s}^{(1)\dagger} B_{\boldsymbol{k}\boldsymbol{q}\,s}^{(1)} + B_{\boldsymbol{k}'\boldsymbol{q}\,s}^{(1)\dagger} B_{\boldsymbol{k}\boldsymbol{q}\,s}^{(2)\dagger} + B_{\boldsymbol{k}'\boldsymbol{q}\,s}^{(2)} B_{\boldsymbol{k}\boldsymbol{q}\,s}^{(1)} + B_{\boldsymbol{k}'\boldsymbol{q}\,s}^{(2)} B_{\boldsymbol{k}\boldsymbol{q}\,s}^{(2)\dagger} \right],\end{aligned} \tag{30}$$

where

$$n_{\boldsymbol{k}s}^{(j)} = c_{\boldsymbol{k}s}^{(j)\dagger} c_{\boldsymbol{k}s}^{(j)} \tag{31}$$

is the number operator for the "electrons" (1) ["holes" (2), fluxon (3)] at momentum $\boldsymbol{k}$ and spin s with the energy $\varepsilon_{\boldsymbol{k}}^{(j)}$, with annihilation (creation) operators $c\ (c^\dagger)$ satisfying the Fermi anti-commutation rules:

$$\{c_{\boldsymbol{k}s}^{(i)},\, c_{\boldsymbol{k}'s'}^{(j)\dagger}\} \equiv c_{\boldsymbol{k}s}^{(i)} c_{\boldsymbol{k}'s'}^{(j)\dagger} + c_{\boldsymbol{k}'s'}^{(j)\dagger} c_{\boldsymbol{k}s}^{(i)} = \delta_{\boldsymbol{k},\boldsymbol{k}'} \delta_{s,s'} \delta_{i,j}\,, \quad \{c_{\boldsymbol{k}s}^{(i)}, c_{\boldsymbol{k}'s'}^{(j)}\} = 0\,. \tag{32}$$

The fluxon number operator $n_{\boldsymbol{k}s}^{(3)}$ is represented by $a_{\boldsymbol{k}s}^\dagger a_{\boldsymbol{k}s}$ with $a\ (a^\dagger)$ satisfying the anticommutation rules:

$$\{a_{\boldsymbol{k}s},\, a_{\boldsymbol{k}'s'}^\dagger\} = \delta_{\boldsymbol{k},\boldsymbol{k}'} \delta_{s,s'}\,, \quad \{a_{\boldsymbol{k}s},\, a_{\boldsymbol{k}'s'}\} = 0\,. \tag{33}$$

The phonon exchange attraction can create electron-fluxon composites. We call the conduction-electron composite with an odd (even) number of fluxons c-boson (c-fermion). The electron (hole)-type c-particles carry negative (positive) charge. The pair operators B in Eq. (30) are defined by

$$B_{\boldsymbol{k}\boldsymbol{q},s}^{(1)\dagger} \equiv c_{\boldsymbol{k}+\boldsymbol{q}/2,s}^{(1)\dagger} a_{-\boldsymbol{k}+\boldsymbol{q}/2,-s}^\dagger\,, \quad B_{\boldsymbol{k}\boldsymbol{q},s}^{(2)} \equiv a_{-\boldsymbol{k}+\boldsymbol{q}/2,-s} c_{\boldsymbol{k}+\boldsymbol{q}/2,s}^{(2)}\,. \tag{34}$$

The prime on the summation in Eq. (30) means the restriction:

$$0 < \varepsilon_{\boldsymbol{k}s}^{(j)} < \hbar\omega_{\mathrm{D}}\,, \quad \omega_{\mathrm{D}} = \text{the Debye frequency}. \tag{35}$$

The pairing interaction terms in Eq. (30) conserve the charge. The term $-v_0 B_{\boldsymbol{k}'\boldsymbol{q}\,s}^{(1)\dagger} B_{\boldsymbol{k}\boldsymbol{q}\,s}^{(1)}$, where $v_0 \equiv |V_{\boldsymbol{q}} V_{\boldsymbol{q}}'| (\hbar\omega_0 A)^{-1}$, is the pairing strength, generates a transition in electron-type c-fermion states. Similarly, the exchange of a phonon generates a transition between hole-type c-fermion states, represented by $-v_0 B_{\boldsymbol{k}'\boldsymbol{q}\,s}^{(2)\dagger} B_{\boldsymbol{k}\boldsymbol{q}\,s}^{(2)\dagger}$. The phonon exchange can also pair-create (pair-annihilate) electron (hole) type-c-boson pairs, and the effects of these processes are represented by $-v_0 B_{\boldsymbol{k}'\boldsymbol{q}\,s}^{(1)\dagger} B_{\boldsymbol{k}\boldsymbol{q}\,s}^{(2)\dagger}$ $\left(-v_0 B_{\boldsymbol{k}\boldsymbol{q}\,s}^{(1)} B_{\boldsymbol{k}\boldsymbol{q}\,s}^{(2)}\right)$.

The Cooper pair is formed from two "electrons" (or "holes"). Likewise the c-bosons may be formed by the phonon-exchange attraction from c-fermions and fluxons. If the density of the c-bosons is high enough, then the c-bosons will be Bose-Einstein (BE)-condensed and exhibit a superconductivity.

To treat superconductivity we may modify the pair operators in Eq. (34) as

$$B_{\boldsymbol{k}\boldsymbol{q},s}^{(1)\dagger} \equiv c_{\boldsymbol{k}+\boldsymbol{q}/2,s}^{(1)\dagger} c_{-\boldsymbol{k}+\boldsymbol{q}/2,-s}^{(1)\dagger}\,, \quad B_{\boldsymbol{k}\boldsymbol{q},s}^{(2)} \equiv c_{-\boldsymbol{k}+\boldsymbol{q}/2,-s}^{(2)} c_{\boldsymbol{k}+\boldsymbol{q}/2,s}^{(2)}\,. \tag{36}$$

Then, the pairing interaction terms in Eq. (30) are formally identical with those in the generalized BCS Hamiltonian [3]. If we assume that only zero momentum Cooper pairs ($q = 0$) are generated, then the Hamiltonian $\mathcal{H}$ in Eq. (30) is reduced to the original BCS Hamiltonian, ref. [12], Eq. (2.14).

© 2014 Global Journals Inc. (US)

We first consider the integer QHE. We choose a conduction electron and a fluxon for the pair. The c-bosons, having the linear dispersion relation:

$$\varepsilon^{(j)} = w_0 + \frac{2}{\pi} v^{(j)} p \,, \tag{37}$$

can move in all directions in the plane with the constant speed $(2/\pi)v_{\mathrm{F}}^{(j)}$. A brief derivation of Eq. (37) is given in Appendix C. The supercurrent is generated by ∓c-bosons monochromatically condensed at the momentum $\boldsymbol{p}$, running along the sample length. The supercurrent density (magnitude) j, calculated by the rule: j = (carrier charge e^*)×(carrier density n_0)× (drift velocity v_{d}), is given by

$$j \equiv e^* n_0 v_{\mathrm{d}} = e^* n_0 \frac{2}{\pi} \left| v_{\mathrm{F}}^{(1)} - v_{\mathrm{F}}^{(2)} \right| . \tag{38}$$

The Hall field (magnitude) E_{H} equals $v_{\mathrm{d}} B$. The magnetic flux is quantized:

$$B = n_\phi \Phi_0 \,, \quad \Phi_0 \equiv e/h \,, \tag{39}$$

where $n_\phi \equiv N_\phi / A$ is the fluxon density. Hence the Hall resistivity ρ_{H} is given by

$$\rho_{\mathrm{H}} \equiv \frac{E_{\mathrm{H}}}{j} = \frac{v_{\mathrm{d}} B}{e^* n_0 v_{\mathrm{d}}} = \frac{1}{e^* n_0} n_\phi \left(\frac{h}{e} \right) = h/e^2 \,. \tag{40}$$

Here we assumed that the c-fermion has a charge magnitude e. For the integer QHE, $e^* = e, n_\phi = n_0$, thus we obtain $\rho_{\mathrm{H}} = h/e^2$, the correct plateau value observed for the principal QHE at $\nu = 1$.

The supercurrent generated by equal numbers of ∓c-bosons condensed monochromatically is neutral. This is reflected in our calculations in Eq. (40). In the calculation we used the *unaveraged* drift velocity difference $(2/\pi)|v_{\mathrm{F}}^{(1)} - v_{\mathrm{F}}^{(2)}|$, which is significant. *Only* the unaveraged drift velocity v_{d} cancels out exactly from numerator/denominator, leading to an exceedingly accurate plateau value.

We now extend our theory to include elementary fermions (electron, fluxon) as members of the c-fermion set. We can then treat the QHE and the HTSC in a unified manner by using the same Hamiltonian $\mathcal{H}$.

We assume that *any c-fermion has the effective charge* e^* *equal to the electron charge (magnitude)* e*:*

$$e^* = e \quad \text{for } \textit{any} \text{ c-fermion.} \tag{41}$$

After studying the low-field QH states of c-fermions, we obtain

$$n_\phi^{(Q)} = n_{\mathrm{e}}/Q, \quad Q = 2,\, 4, \cdots , \tag{42}$$

for the density of the c-fermions with Q fluxons, where n_{e} is the electron density. All fermionic QH states (points) lie on the classical-Hall-effect straight line passing the origin with a constant slope when σ_{H} is plotted as a function of B^{-1}. The density $n_\phi^{(Q)}$ is proportional to the magnetic field B. As the magnetic field is raised, the separation between the LL becomes greater. The higher-Q c-fermion is more difficult to form energetically. This condition is unlikely to depend on the statistics of the c-particles. Hence Eq. (42) should be valid for all integers, odd or even.

$$n_\phi^{(Q)} = n_{\mathrm{e}}/Q \,, \quad Q = 1,\, 2, \cdots , \tag{43}$$

We take the case of Q = 3. The c-boson containing an electron and three fluxons can be formed from a c-fermion with two fluxons and a fluxon. If the c-bosons are BE-condensed, then the supercurrent density *j* is given by Eq. (38). Hence we obtain

$$\rho_{\mathrm{H}} \equiv \frac{E_{\mathrm{H}}}{j} = \frac{v_{\mathrm{d}} B}{e^* n_0 v_{\mathrm{d}}} = \frac{n_\phi}{e^* n_0} \left(\frac{h}{e} \right) = \frac{1}{3} \frac{h}{e^2} \,, \tag{44}$$

where we used Eqs. (41) and (43).

The principal fractional QHE occurs at $\nu = 1/3$, where the Hall resistivity value is $h/(3e^2)$ as shown in Eq. (44). A set of weaker QHE occur on the lower field side at

$$\nu = \frac{1}{3},\, \frac{2}{3},\, \cdots . \tag{45}$$

The QHE behavior at $\nu = P/Q$ for any Q is similar. We illustrate it by taking integer QHE with $\nu = P$ $(= 1,\, 2, \cdots)$. The field magnitude becomes smaller with increasing P. The LL degeneracy is proportional to B, and hence P $\mathrm{LL's}$ must be considered. First consider the case P= 2. Without the phonon-exchange attraction the electrons occupy the lowest two LL's with spin. See Fig. 4 (a). The electrons at each level form c-bosons.

© 2014 Global Journals Inc. (US)

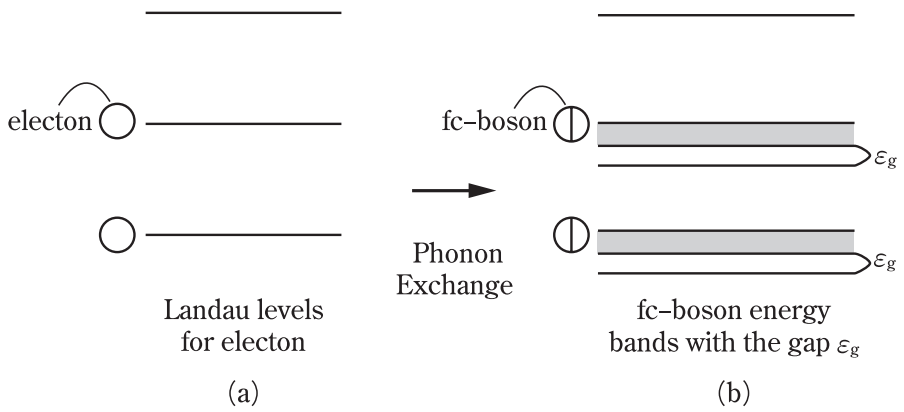

Figure 4 : The electrons which fill up the lowest two LL's, shown in (a) form the QH state at $\nu = 2$ in (b) after the phonon-exchange attraction and the BEC of the c-bosons.

In the superconducting state the supercondensate occupy the monochromatically condensed state, which is separated by the superconducting gap ε_g from the continuum states (band) as shown in the right-hand figure in Fig. 4 (b). The temperature-dependent energy gap $\varepsilon_g(T)$ is defined in terms of the BCS energy parameter Δ. A brief discussion of $\varepsilon_g(T)$ is given in Appendix D. The c-boson density n_0 at each LL is one-half the c-boson density at $\nu = 1$, which is equal to the electron density n_e fixed for the sample. Extending the theory to a general integer, we have

$$n_0 = n_e/P\,. \tag{46}$$

The critical temperature T_c for the condensed c- bosons, which is derived in Appendix E, is given by

$$T_c = 1.24\,\hbar v_F k_B^{-1} n_0^{1/2}\,, \quad n_0 \equiv N_0/A\,, \tag{47}$$

and the gap energy ε_g are smaller for higher P, making the plateau width (a measure of ε_g) smaller in agreement with experiments. The c-bosons have lower energies than the conduction electrons. Hence at the extreme low temperatures the supercurrent due to the condensed c-bosons dominates the normal current due to the conduction electrons and non-condensed c-bosons, giving rise to the dip in ρ.

The main advantages of the c-particles theory are:

- Laughlin's idea of fractional charges of the elementary excitations [14] are not required.
- The c-particles theory indicates that the strength of the QHE is greater at ν = 1/3, 1/5, $\cdots$ in the descending order than at ν = 1 as seen in the experiments [15].
- The half-integer QHE for graphene can be described simply, which will be discussed in Section IV(a).

IV. Discussion

a) Half-integer QHE

The QHE in graphene is observed at filling factor

$$\nu = \frac{2P+1}{2}\,, \quad P = 0,\, \pm 1,\, \pm 2, \cdots\,. \tag{48}$$

The half-integer QHE arises from the BEC of the c-bosons formed by the phonon exchange between a pair of like-charge (simplest) c-fermions with two fluxons. This can be seen by calculating the Hall resistivity ρ_H as follows:

We assume that any c-fermion has the effective charge $e^* = e$ for any c-fermion. After studying the weak-field fermionic QH states we obtain

$$n_\phi^{(Q)} = n_e/Q \tag{49}$$

for the density of the c-fermions with Q fluxons. We calculate the Hall conductivity σ_H and obtain

$$\sigma_H \equiv \rho_H^{-1} = \frac{j}{E_H} = \frac{2en_0 v_d}{v_d n_\phi \Phi_0} = \frac{2e^2}{h}\,. \tag{50}$$

b) The SdH Oscillations

The QHE states with integers P= 1, 2, $\cdots$ are generated on the weaker field side. Their strength decreases with increasing P. Thus, we have obtained the rule (48) within the framework of the c-particles theory. The period of the sinusoidal oscillations is

$$\frac{\varepsilon_F}{\hbar\omega_c} \quad \text{for SdH oscillations.} \tag{51}$$

The numerous oscillations in the density of states within the width of $|-df/d\varepsilon|$ generate SdH oscillations, see Fig. 2. This is caused by c-fermions with two fluxons in the low fields. The c-fermions are bound and stable. The cyclotron mass m^* and the magnetotransport mass M^* are introduced for the cyclotron motion and the guiding-center (c-fermion) motion, respectively. Careful analysis of the data can yield the values of m^* and M^*.

c) The QH Oscillations

The c-boson in graphene is formed by the phonon exchange from a pair of like charge c-fermions.

© 2014 Global Journals Inc. (US)

When ± c-bosons are generated abundantly in the system, they undergo a BE condensation and generate a superconducting state with an energy gap ε_g. The signature of the BE condensation is zero resistance, see Fig. 1, $\nu = 10$. The superconducting state with the energy gap is very stable. The rise in R_{xx} and r_{xx} on both sides are of an Arhenius exponential type. The period of the sinusoidal oscillations are

$$\frac{\varepsilon_F}{\hbar\omega_c} \text{ for QH oscillations.} \quad (52)$$

Thus, the SdH and QH periods match with each other, see Eqs. (A11) and (B4). But the phases are different by $\pi/2$. This causes transitions between the oscillation maxima and minima.

d) The Gate Field Effect

Graphene and carbon nanotubes are often subjected to the so-called gate voltage in experiments. The gate voltage polarizes the conductor and the surface charges ("electrons","holes") are induced. An explanation is given in Appendix F.

The data by Tan *et al*., ref. 1, Fig. 3, are reproduced in Fig. 5. If the bias voltage is applied, then "holes" will be generated at the boundary surface and move. Only "holes" are induced on the metallic surface. The "hole" currents are normal and obey Ohm's law. Thus, the currents in μA at $V_g = -40$ V, $T = 2.0$ K are proportional to the bias voltages.

e) The Temperatures-dependent Relaxation Rate

Tan *et al.* [1] investigated the temperature dependence of the magnetic resistance between 2 and 50 K, at $V_g = -40$ V, $n = 3.16 \times 10^{12}$cm^{-2}. Their data, ref. 1, Fig. 3 are reproduced in Fig. 5. They interpreted their data, shown in Fig. 5 in terms of the elevated electron temperature. A more natural interpretation is the phonon population change. The surface "holes" are scattered by phonons populated following Planck's distribution function:

$$f(\hbar sp) = \frac{1}{e^{\beta\hbar sp} - 1}, \quad \beta \equiv (k_B T)^{-1}, \quad (53)$$

where s is the phonon speed and p the momentum magnitude. The high-temperature limit

$$f \propto T, \quad T \to \infty \quad (54)$$

generates

$$\gamma \equiv \tau^{-1} \propto f \propto T \quad (55)$$

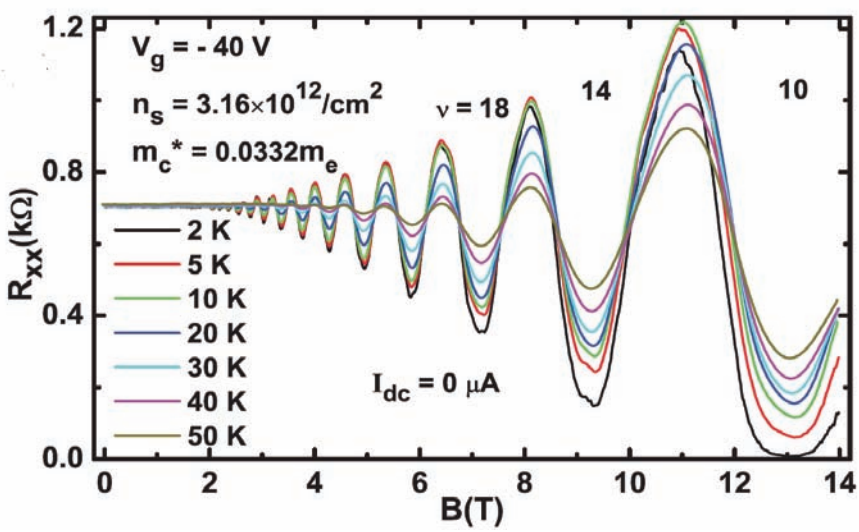

Figure 5 : (Color online) Temperature dependence of the magnetic resistance R_{xx} measured at $V_g = -40$ V and zero bias (after Tan *et al.* [1]).

for the relaxation rate $\gamma \equiv \tau^{-1}$, which is proportional to the phonon population *f*.

The highlights of the present work are:

- There are no backgrounds for both SdH and QHE oscillations, confirming that graphene is a 2D system.
- For both SdH and QH oscillations the periods of the sinusoidal oscillation are the same: $\varepsilon_F/\hbar\omega_c$.
- The SdH states are described by c-fermions with even numbers of fluxons. The c-fermions are in the negative-energy (bound) states relative to the Fermi energy.
- The QH states are described by BE-condensed c-bosons with odd numbers of fluxons. These c-bosons are in the negative-energy states and are more stable with the superconducting energy gaps ε_g.
- The envelope of the SdH oscillations decreases like $[\sinh(2\pi^2 M^* k_B T/\hbar eB)]^{-1}$ with the magnetotransport mass M^* distinct from the cyclotron mass m^* when plotted as a function of B^{-1}. The envelope grows.
- The envelope of the QH oscillations also grows and ends with the principal QHE at $\nu = \pm 1/2$. The half-

© 2014 Global Journals Inc. (US)

integer QH plateaus arise from the BEC of the c-bosons formed, each from a pair of like-charge c-fermions with two fluxons.

- The full set of half-integer QHE is given by $\nu = (2P + 1)/2$, $P = 0, 1, 2, \cdots$. The weaker QHE occurs on the smaller field magnitude side. The strength (width) decreases with increasing P.

V. Appendix A: Magnetic Oscillations in 2D

The statistical weight $\mathcal{W}$ is the total number of states having energies less than $\varepsilon = \left(N_{\rm L} + \frac{1}{2}\right)\hbar\omega_{\rm c}$ This $\mathcal{W}$ is given by

$$\mathcal{W} = \frac{L_x L_y}{(2\pi\hbar)^2} 2\pi\Pi\Delta\Pi \cdot 2\sum_{N_{\rm L}}^{\infty} \Theta\left[\varepsilon - \left(N_{\rm L} + \frac{1}{2}\right)\hbar\omega_{\rm c}\right], \tag{A1}$$

where $\Theta(x)$ is the Heaviside step function:

$$\Theta(x) = \begin{cases} 1 & \text{if } x > 0\,, \\ 0 & \text{if } x < 0\,. \end{cases} \tag{A2}$$

We introduce the dimensionless variable $\varepsilon^* \equiv 2\pi\varepsilon/\hbar\omega_{\rm c}$, and rewrite $\mathcal{W}$ as

$$\mathcal{W}(\varepsilon) = C\,(\hbar\omega_{\rm c})\,2\sum_{N_{\rm L}=0}^{\infty}\Theta(\varepsilon^* - (2N_{\rm L}+1)\pi)\,, \quad C \equiv 2\pi m^* A(2\pi\hbar)^{-2}\,. \tag{A3}$$

We assume a high Fermi degeneracy such that

$$\mu \simeq \varepsilon_{\rm F} \gg \hbar\omega_{\rm c}\,. \tag{A4}$$

The sum in Eq. (A3) can be computed by using Poisson's summation formula:[16]

$$\sum_{n=-\infty}^{\infty} f(2\pi n) = \frac{1}{2\pi}\sum_{n=-\infty}^{\infty}\int_{-\infty}^{\infty} {\rm d}\tau\, f(\tau)e^{-in\tau}\,. \tag{A5}$$

We write the sum in Eq. (A3) as

$$2\sum_{n=0}^{\infty}\Theta(\varepsilon - (2n+1)\pi) = \Theta(\varepsilon - \pi) + \psi(\varepsilon; 0), \tag{A6}$$

$$\psi(\varepsilon; x) \equiv \sum_{n=-\infty}^{\infty}\Theta(\varepsilon - \pi - 2\pi|n + x|)\,. \tag{A7}$$

Note that $\psi(\varepsilon; x)$ is periodic in x and can therefore be expanded in a Fourier series. After the Fourier expansion, we set $x = 0$ and obtain Eq. (A6). By taking the real part ($\mathcal{R}e$) of Eq. (A6) and using Eq. (A5), we obtain

$$\mathcal{R}e\{\text{Eq. (A6)}\} = \frac{1}{\pi}\int_0^{\infty}{\rm d}\tau\Theta(\varepsilon - \tau) + \frac{2}{\pi}\sum_{\nu=1}^{\infty}(-1)^{\nu}\int_0^{\infty}{\rm d}\tau\Theta(\varepsilon - \tau)\cos\nu\tau\,, \tag{A8}$$

where we used $\varepsilon \equiv 2\pi\varepsilon/\hbar\omega_{\rm c} \gg 1$ and neglected π against ε. The integral in the first term in Eq. (A8) yields ε. The integral in the second term is

$$\int_0^{\infty}{\rm d}\tau\,\Theta(\varepsilon - \tau)\cos\nu\tau = \frac{1}{\nu}\sin\nu\varepsilon\,. \tag{A9}$$

Thus, we obtain

$$\mathcal{R}e\{\text{Eq. (A5)}\} = \frac{1}{\pi}\varepsilon + \frac{2}{\pi}\sum_{\nu=1}^{\infty}\frac{(-1)^{\nu}}{\nu}\sin\nu\varepsilon\,. \tag{A10}$$

Using Eqs. (A3) and (A10), we obtain

$$\begin{aligned}\mathcal{W}(E) &= \mathcal{W}_0 + \mathcal{W}_{\rm osc} \\ &= C(\hbar\omega_{\rm c})\left(\frac{\varepsilon}{\pi}\right) + C\hbar\omega_{\rm c}\frac{2}{\pi}\sum_{\nu=1}^{\infty}\frac{(-1)^{\nu}}{\nu}\sin\left(\frac{2\pi\nu\varepsilon}{\hbar\omega_{\rm c}}\right)\,.\end{aligned} \tag{A11}$$

The B-independent term $\mathcal{W}_0$ is the statistical weight for the system with no fields. The term $\mathcal{W}_{\rm osc}$ generates magnetic oscillations. There is no term proportional to B^2, generating the Landau diamagnetism.

© 2014 Global Journals Inc. (US)

VI. Appendix B: Proof of Eq. (24)

We consider the integral:

$$\int_0^\infty \mathrm{d}\varepsilon \frac{\mathrm{d}f}{\mathrm{d}\varepsilon} \int_0^\varepsilon \mathrm{d}\varepsilon' \sin\left(\frac{2\pi\varepsilon'}{\hbar\omega_\mathrm{c}}\right) = \int_0^\infty \mathrm{d}\varepsilon \sin\left(\frac{2\pi\varepsilon}{\hbar\omega_\mathrm{c}}\right) f(\varepsilon) \equiv I\,. \tag{B1}$$

We introduce a new variable $\zeta = \beta(\varepsilon - \mu)$ and extend the lower limit to $-\infty$ $(\beta\mu \to \infty)$, and obtain

$$\int_0^\infty \mathrm{d}\varepsilon \cdots \frac{1}{e^{\beta(\varepsilon-\mu)}+1} = \beta^{-1}\int_{-\mu\beta}^\infty \mathrm{d}\zeta \cdots \frac{1}{e^\zeta+1} \to \beta^{-1}\int_{-\infty}^\infty \mathrm{d}\zeta \cdots \frac{1}{e^\zeta+1}\,. \tag{B2}$$

Using sin(A + B) = sin A cos B + cos A sin B and

$$\int_{-\infty}^\infty \mathrm{d}\zeta\, e^{i\alpha\zeta}\frac{1}{e^\zeta+1} = \frac{\pi}{i\sinh\pi\alpha}\,, \tag{B3}$$

we obtain from Eq. (23)

$$I = \int_0^\infty \mathrm{d}\varepsilon\, f(\varepsilon)\sin\left(\frac{2\pi\varepsilon}{\hbar\omega_\mathrm{c}}\right) = \pi k_\mathrm{B}T\,\frac{\cos(2\pi\varepsilon_\mathrm{F}/\hbar\omega_\mathrm{c})}{\sinh(2\pi^2 M^* k_\mathrm{B}T/\hbar eB)} \tag{B4}$$

for $\varepsilon_\mathrm{F} \gg k_\mathrm{B}T$.

VII. Appendix C: Derivation of Eq. (37)

The phonon exchange attraction is in action for any pair of electrons near the Fermi surface. In general the bound pair has a net momentum, and hence, it moves. Such a pair is called a *moving pairon*. The energy w_q of a moving pairon for 2D case can be obtained from the Cooper equation [13]:

$$w_q a(\boldsymbol{k},\boldsymbol{q})\{\varepsilon(|\boldsymbol{k}+\boldsymbol{q}/2|)+\varepsilon(|-\boldsymbol{k}+\boldsymbol{q}/2|)\}a(\boldsymbol{k},\boldsymbol{q}) - \frac{v_0}{(2\pi\hbar)^2}\int' \mathrm{d}^2k'\, a(\boldsymbol{k}',\boldsymbol{q}), \tag{C1}$$

The prime on the k'-integral means the restriction on the integration domain arising from the phonon exchange attraction, see below. We note that the net momentum $\boldsymbol{q}$ is a constant of motion, which arises from the fact that the phonon exchange is an internal process, and hence cannot change the net momentum. The *pair wave functions* $a(\boldsymbol{k},\boldsymbol{q})$ are coupled with respect to the other variable $\boldsymbol{k}$, meaning that the exact (or energy-eigenstate) pairon wavefunctions are superpositions of the pair wavefunctions $a(\boldsymbol{k},\boldsymbol{q})$.

Eq. (C1) can be solved as follows. We assume that the energy w_q is negative: $w_q < 0$. Then,

$$\varepsilon(|\boldsymbol{k}+\boldsymbol{q}/2|)+\varepsilon(|-\boldsymbol{k}+\boldsymbol{q}/2|) - w_q > 0\,.$$

Rearranging the terms in Eq. (C1) and dividing by $\varepsilon(|\boldsymbol{k}+\boldsymbol{q}/2|)+\varepsilon(|-\boldsymbol{k}+\boldsymbol{q}/2|) - w_q$, we obtain

$$a(\boldsymbol{k},\,\boldsymbol{q}) = C(\boldsymbol{q})/\{\varepsilon(|\boldsymbol{k}+\boldsymbol{q}/2|)+\varepsilon(|-\boldsymbol{k}+\boldsymbol{q}/2|) - w_q\}\,, \tag{C2}$$

where

$$C(\boldsymbol{q}) \equiv \frac{v_0}{(2\pi\hbar)^2}\int' \mathrm{d}^2k'\, a(\boldsymbol{k}',\boldsymbol{q})\,, \tag{C3}$$

which is *k*-independent. Introducing Eq. (C2) in Eq. (C1), and dropping the common factor $C(\boldsymbol{q})$, we obtain

$$1 = \frac{v_0}{(2\pi\hbar)^2}\int' \frac{\mathrm{d}^2k}{\varepsilon(|\boldsymbol{k}+\boldsymbol{q}/2|)+\varepsilon(|-\boldsymbol{k}+\boldsymbol{q}/2|)+|w_q|}\,. \tag{C4}$$

We now assume a free-electron model. The Fermi surface is a circle of the radius (momentum)

$$k_\mathrm{F} \equiv (2m_1\varepsilon_\mathrm{F})^{1/2}\,, \tag{C5}$$

where m_1 represents the effective mass of an electron. The energy $\varepsilon(|\boldsymbol{k}|)$ is given by

$$\varepsilon(|\boldsymbol{k}|) \equiv \varepsilon_k = \frac{k^2 - k_\mathrm{F}^2}{2m_1}\,. \tag{C6}$$

© 2014 Global Journals Inc. (US)

The prime on the k-integral in Eq. (C4) means the restriction:

$$0 < \varepsilon(|\boldsymbol{k}+\boldsymbol{q}/2|),\ \varepsilon(|-\boldsymbol{k}+\boldsymbol{q}/2|) < \hbar\omega_{\rm D}\,. \quad \text{(C7)}$$

We may choose the z-axis along $\boldsymbol{q}$ as shown in Fig. 6. The k-integral can then be expressed

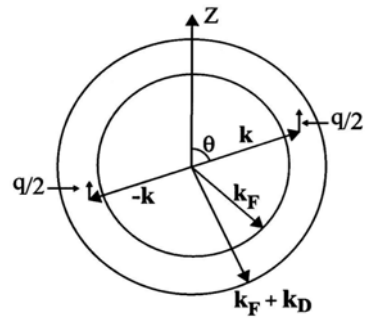

Figure 6 : The range of the interaction variables k, θ is limited to a circular shell of thickness $k_{\rm D}$

by

$$\frac{(2\pi\hbar)^2}{v_0} = 2\int_0^{\frac{\pi}{2}} {\rm d}\theta \int_{k_{\rm F}+\frac{1}{2}q\cos\theta}^{k_{\rm F}+k_{\rm D}-\frac{1}{2}q\cos\theta} \frac{k{\rm d}k}{|w_q| + 2\varepsilon_k + (4m_1)^{-1}q^2}\,, \quad \text{(C8)}$$

where $k_{\rm D}$ is given by

$$k_{\rm D} \equiv m_1\hbar\omega_{\rm D}k_{\rm F}^{-1}\,. \quad \text{(C9)}$$

After performing the integration and taking the small-q and small-$(k_{\rm D}/k_{\rm F})$ limits, we obtain

$$w_q = w_0 + \frac{2}{\pi}v_{\rm F}q\,, \quad \text{(C10)}$$

where w_0 is given by

$$w_0 = \frac{-2\hbar\omega_{\rm D}}{\exp\{2/v_0\mathcal{D}(0)\} - 1}\,. \quad \text{(C11)}$$

As expected, the zero-momentum pairon has the lowest energy. The excitation energy is continuous with *no* energy gap. The energy w_q increases *linearly* with momentum q $(=|\boldsymbol{q}|)$ for small q. This behavior arises from the fact that the density-of-states is strongly reduced by increasing momentum q and dominates the q^2 increase of the kinetic energy. The linear dispersion relation means that a *Cooper pair (pairon) moves like a massless particle with a common speed* $(2/\pi)v_{\rm F}$. This relation plays a vital role in the BE condensation of pairons.

VIII. Appendix D: Temperature Dependent Energy Gap $\varepsilon_{\rm g}(T)$

The c-bosons can be bound by the interaction Hamiltonian $-v_0 B^{(j)\dagger}_{\boldsymbol{k'q}} B^{(j)}_{\boldsymbol{kq}}$. The fundamental c-bosons (fc-bosons) can undergo a Bose-Einstein condensation (BEC) below the critical temperature $T_{\rm c}$. The fc-bosons are condensed at a momentum along the sample length. Above $T_{\rm c}$, they can move in all directions in the plane with the Fermi speed $v_{\rm F}^{(j)}$. The ground state energy w_0 can be calculated by solving the Cooper-like equation [13]:

$$w_0\Psi(\boldsymbol{k}) = \varepsilon_{\boldsymbol{k}}\Psi(\boldsymbol{k}) - \frac{v_0}{(2\pi\hbar)^2}\int' {\rm d}^2k'\Psi(\boldsymbol{k}')\,, \quad \text{(D1)}$$

where Ψ is the reduced wave function for the stationary fc-bosons; we neglected the fluxon energy. We obtain after simple calculations

$$w_0 = \frac{-\hbar\omega_{\rm D}}{\exp\{1/(v_0\mathcal{D}_0)\} - 1} < 0\,, \quad \text{(D2)}$$

where $\mathcal{D}_0 \equiv \mathcal{D}(\varepsilon_{\rm F})$ is the density of states per spin at $\varepsilon_{\rm F}$. Note that the binding energy $|w_0|$ does not depend on the "electron" mass. Hence, the $\pm$fc-bosons have the same energy w_0.

At 0 K only *stationary* fc-bosons are generated. The ground state energy W_0 of the system of fc-bosons is

$$W_0 = 2N_0w_0\,, \quad \text{(D3)}$$

where N_0 is the $-$ (or $+$) fc-boson number.

At a finite T there are moving (non-condensed) fc-bosons, whose energies $w_{\boldsymbol{q}}^{(j)}$ are obtained from [13]

$$w_{\boldsymbol{q}}^{(j)}\Psi(\boldsymbol{k},\boldsymbol{q}) = \varepsilon^{(j)}_{|\boldsymbol{k}+\boldsymbol{q}|}\Psi(\boldsymbol{k},\boldsymbol{q}) - \frac{v_0}{(2\pi\hbar)^2}\int' {\rm d}^2k'\Psi(\boldsymbol{k}',\boldsymbol{q})\,. \quad \text{(D4)}$$

For small q, we obtain

$$w_q^{(j)} = w_0 + \frac{2}{\pi}v_{\rm F}^{(j)}|\boldsymbol{q}|\,, \quad \text{(D5)}$$

where $v_{\rm F}^{(j)} \equiv (2\varepsilon_{\rm F}/m_j)^{1/2}$ is the Fermi speed. The energy $w_q^{(j)}$ depends *linearly* on the momentum magnitude q.

© 2014 Global Journals Inc. (US)

The system of *free massless bosons* undergoes a BEC in 2D at the critical temperature [2]:

$$k_{\rm B}T_{\rm c} = 1.945\,\hbar c n^{1/2}\,, \qquad \text{(D6)}$$

where *c* is the boson speed, and *n* the density. The brief derivation of Eq. (D6) is given in Appendix E. Substituting $c = (2/\pi)v_{\rm F}$ in Eq. (D6), we obtain

$$k_{\rm B}T_{\rm c} = 1.24\,\hbar v_{\rm F} n_0^{1/2}\,, \qquad n_0 \equiv N_0/A\,. \qquad \text{(D7)}$$

The interboson distance $R_0 \equiv 1/\sqrt{n_0}$ calculated from this equation is $1.24\,\hbar v_{\rm F}/(k_{\rm B}T_{\rm c})$. The boson size r_0 calculated from Eq. (D7), using the uncertainty relation $q_{\max} r_0 \sim \hbar$ and $|w_0| \sim k_{\rm B}T_{\rm c}$, is $r_0 = (2/\pi)\hbar v_{\rm F}(k_{\rm B}T_{\rm c})^{-1}$, which is a few times smaller than R_0. Thus the bosons do *not* overlap in space, and the *free boson model* is justified.

Let us take GaAs/AlGaAs. We assume $m^* = 0.067 m_{\rm e}$, $m_{\rm e}$= electron mass. For the electron density 10^{11} cm^{-2}, we have $v_{\rm F}$ = 1.36 × 10^6 cm s^{-1}. Not all electrons are bound with fluxons since the simultaneous generations of ± fc-bosons is required. If we assume n_0 = 10^{10} cm^{-2}, we obtain $T_{\rm c}$ = 1.29 K, which is reasonable. The precise measurement of $T_{\rm c}$ may be made in a sample of constricted geometry. The plateau width should vanish at $T_{\rm c}$ since $\varepsilon_{\rm g}$ = 0.

In the presence of the BE-condensate below $T_{\rm c}$ the unfluxed electron carries the energy $E_{\boldsymbol{k}}^{(j)} = \left(\varepsilon_{\boldsymbol{k}}^{(j)2} + \Delta^2\right)^{1/2}$, where the quasielectron energy gap Δ is the solution of

$$1 = v_0 \mathcal{D}_0 \int_0^{\hbar\omega_{\rm D}} {\rm d}\varepsilon \frac{1}{(\varepsilon^2+\Delta^2)^{1/2}} \left\{1 + \exp[-\beta(\varepsilon^2+\Delta^2)^{1/2}]\right\}^{-1}, \quad \beta \equiv (k_{\rm B}T)^{-1}\,. \qquad \text{(D8)}$$

Note that the gap Δ depends on T. At $T_{\rm c}$ there is no condensate, and hence Δ vanishes.

The *moving* fc-boson below $T_{\rm c}$ with the condensate background has the energy $\widetilde{w}_{\boldsymbol{q}}$, obtained from

$$\widetilde{w}_{\boldsymbol{q}}^{(j)} \Psi(\boldsymbol{k},\boldsymbol{q}) = E_{|\boldsymbol{k}+\boldsymbol{q}|}^{(j)} \Psi(\boldsymbol{k},\boldsymbol{q}) - \frac{v_0}{(2\pi\hbar)^2} \int' {\rm d}^2k' \Psi(\boldsymbol{k}',\boldsymbol{q})\,, \qquad \text{(D9)}$$

where $E^{(j)}$ replaced $\varepsilon^{(j)}$ in Eq. (D4). We obtain

$$\widetilde{w}_{\boldsymbol{q}}^{(j)} = \widetilde{w}_0 + \frac{2}{\pi} v_{\rm F}^{(j)} |\boldsymbol{q}| = w_0 + \varepsilon_{\rm g} + \frac{2}{\pi} v_{\rm F}^{(j)} q\,, \qquad \text{(D10)}$$

where $\widetilde{w}_0(T)$ is determined from

$$1 = \mathcal{D}_0 v_0 \int_0^{\hbar\omega_{\rm D}} \frac{{\rm d}\varepsilon}{|\widetilde{w}_0| + (\varepsilon^2+\Delta^2)^{1/2}}\,. \qquad \text{(D11)}$$

The energy difference

$$\widetilde{w}_0(T) - w_0 \equiv \varepsilon_{\rm g}(T) > 0 \qquad \text{(D12)}$$

represents the T-*dependent energy gap* between the moving and stationary fc-bosons. The energy $\widetilde{w}_{\boldsymbol{q}}$ is negative. Otherwise, the fc-boson should break up. This limits $\varepsilon_{\rm g}$ to be less than $|w_0|$. The energy gap $\varepsilon_{\rm g}(T)$ is $|w_0|$ at 0 K. It declines to zero as the temperature approaches $T_{\rm c}$.

A similar behavior also holds for graphene. The experimental electron density is 3.16 ×10^{12} cm^{-2} and the Fermi velocity $v_{\rm F}$ = 1.1×10^6 m/s. The critical temperature $T_{\rm c}$ is expected to be much above 300 K. The temperature 50 K can be regarded as a very low temperature relative to $T_{\rm c}$. Hence the QH state has an Arrhenius-decay type exponential stability factor:

$$\exp[-\varepsilon_{\rm g}(T=0)/k_{\rm B}T]\,, \qquad \text{(D13)}$$

where $\varepsilon_{\rm g}(T{=}0)$ is the zero-temperature energy gap.

IX. Appendix E: Proof of Eq. (D6)

The BEC occurs when the chemical potential μ vanishes at a finite T. The critical temperature $T_{\rm c}$ can be determined from

$$n = (2\pi\hbar)^{-2} \int {\rm d}^2p\,[e^{\beta_{\rm c}\varepsilon} - 1]^{-1}, \quad \beta_{\rm c} \equiv (k_{\rm B}T_{\rm c})^{-1}. \qquad \text{(E1)}$$

After expanding the integrand in powers of $e^{-\beta_{\rm c}\varepsilon}$ and using $\varepsilon = cp$, we obtain

$$n = 1.654\,(2\pi)^{-1}(k_{\rm B}T_{\rm c}/\hbar c)^2\,, \qquad \text{(E2)}$$

yielding formula (D6).

X. Appendix F: The Gate Field Effect

Let us take a rectangular metallic plate and place it under an external electric field $\boldsymbol{E}$, see Fig. 7. When the upper and lower sides are parallel to the field $\boldsymbol{E}$, then the remaining two sides surfaces are polarized so as to reduce the total electric field energy. If the plate is rotated, then all side surfaces are polarized.

Let us now look at the electric field effect in $\boldsymbol{k}$-space. Assume a free electron system which has a spherical Fermi surface at zero field. Upon the application of a static fielfd $\boldsymbol{E}$, the Fermi surface will be shifted towards the right by $qE\tau/m^*$, where τ is the mean free time and m^* the effective mass, as shown in Fig. 8. There is a steady current since the sphere is off

© 2014 Global Journals Inc. (US)

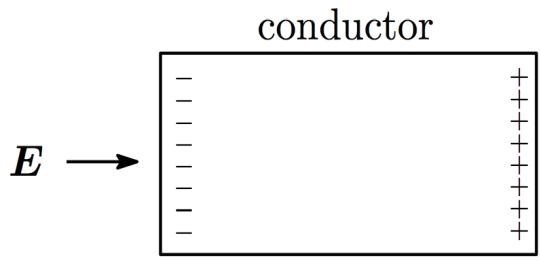

Figure 7 : The surface charges are induced in the conductor under an external electric field $\boldsymbol{E}$.

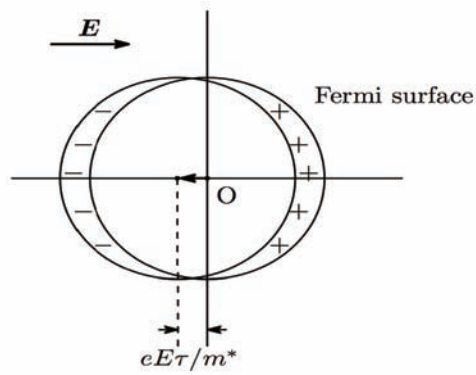

Figure 8 : The Fermi surface is shifted by $eE\tau/m^*$ due to the electric field $\boldsymbol{E}$.

from the center O. We may assume that the ionic lattice is stationary. Then, there is an unbalanced charge distribution as shown, where we assume $q = -e < 0$. This effect will appear only on the surface of the metal. We used the fermionic nature of electrons.

References

1. Z. Tan, C. Tan, L. Ma, G. T. Liu, L. Lu and C. L. Yang, Phys. Rev. B **84**, 115429 (2011).
2. S. Fujita and A. Suzuki, *Electrical Conduction in Graphene and Nanotubes,* (Wiley-VCH, Weinheim, Germany, 2013).
3. S. Fujita and Y. Okamura, Phys. Rev. B **69**, 155313 (2004); see also, S. Fujita, K. Ito, Y. Kumek and Y. Okamura, Phys. Rev. B **70**, 075304 (2004).
4. L. Shubnikov and W. J. de Haas, Leiden Comm. 207a, 207c, 207d, 210a (1930).
5. L. Onsager, Philos. Mag. **43**, 1006 (1952).
6. J. K. Jain, Phys. Rev. Lett. **63**, 199 (1989); Phys. Rev. B **40,** 8079 (1989); *ibid.* B **41**, 7653 (1990); Surf. Sci. **263**, 65 (1992): see also J. K. Jain, *Composite Fermions*, (Cambridge University Press, Cambridge, UK, 2007).
7. R. B. Dingle, Proc.Roy. Soc. A **211**, 500 (1952).
8. S. C. Zhang, T.H. Hansson and S. Kivelson, Phys. Rev. Lett. **62**, 82 (1989).
9. R. B. Laughlin, Science **242**, 525 (1988).
10. P. A. M. Dirac, *Principles of Quantum Mechanics*, 4th ed. (Oxford University Press, Oxford, UK, 1958), pp. 172-176, pp. 248-252, p. 267.
11. P. Ehrenfest and J. R. Oppenheimer, Phys. Rev. **37**, 311 (1931); H. A. Bethe and R. J. Jackiw, *Intermediate Quantum Mechanics*, 2nd ed., Benjamin, New York, 1968, p. 23; S. Fujita and D.L. Morabito, Mod. Phys. Lett. B **12** 1061 (1998).
12. J. Bardeen, L.N. Cooper and J. R. Schrieffer, Phys. Rev. **108**, 1175 (1957).
13. L. N. Cooper, Phys. Rev. **104**, 1189 (1956).
14. R. B. Laughlin, Phys. Rev. Lett. **50**, 1395 (1983).
15. R. G. Clark, J. R. Mallett, S. R. Haynes, J. J. Harris and C. T. Foxon, Phys. Rev. Lett. **60**, 1747 (1988); V. G. Goldman and B. Su, Science **267**, 1010 (1995); L. Saminadayar, D. C. Glattli, Y. Jin, B. Etienne, Phys. Rev. Lett. **79**, 2526 (1997); R. de Picciotto, M. Reznikov,M. Heiblum, V. Umansky, G. Bunin and D. Mahalu, Nature **389**, 162 (1997).
16. M. Stone and P. Goldbart, *Mathematics for Physics* (Cambridge University Press, Cambridge, UK, 2009), p. 792; P. M. Morse and H. Feshbach, *Methods of Theoretical Physics* (McGraw- Hill, New York, 1953), pp. 466-467; R. Courant and D. Hilbert, *Methods of Mathematical Physics*, vol. 1 (Wiley-Interscience, New York, 1953), pp.76-77.

© 2014 Global Journals Inc. (US)

Global Journal of Science Frontier Research: A
Physics and Space Science
Volume 14 Issue 6 Version 1.0 Year 2014
Type : Double Blind Peer Reviewed International Research Journal
Publisher: Global Journals Inc. (USA)
Online ISSN: 2249-4626 & Print ISSN: 0975-5896

Genesis of the planet Earth

By S. Orlov
Petrozavodski State University, Russian Federation

Abstract- This article is based on the theory of vortex gravitation and physical abnormalities of the Earth - slowing its rotation. Defined orbital acceleration, weight, approach to the Sun and the age of our planet. Offered to justify the creation of planetary material in the center of the Earth torsion, and not as the accumulation of cosmic dust and meteorites from outer space.

Keywords: theory of vortex gravitation, celestial mechanics.

GJSFR-A Classification : FOR Code: 020108

GENESISOFTHEPLANETEARTH

Strictly as per the compliance and regulations of :

© 2014. S. Orlov. This is a research/review paper, distributed under the terms of the Creative Commons Attribution-Noncommercial 3.0 Unported License http://creativecommons.org/licenses/by-nc/3.0/), permitting all non commercial use, distribution, and reproduction in any medium, provided the original work is properly cited.

Genesis of the planet Earth

S. Orlov

Abstract- This article is based on the theory of vortex gravitation and physical abnormalities of the Earth - slowing its rotation. Defined orbital acceleration, weight, approach to the Sun and the age of our planet. Offered to justify the creation of planetary material in the center of the Earth torsion, and not as the accumulation of cosmic dust and meteorites from outer space.

Keywords: theory of vortex gravitation, celestial mechanics.

I. Introduction

From the earliest ages people believed that the Earth's rotation around its axis and revolves around the Sun has always happened and is happening always in identical periods. Doubts about the constancy of the speed of rotation of the earth arose after the discovery of E. Halley in 1695 secular acceleration of the moon's motion. The idea of the secular slowing rotation of the Earth under the influence of tidal friction was first proposed by Kant in 1755 Nowadays Richard Stephenson from Durham University in the UK, based on the descriptions of hundreds of solar and lunar eclipses last 2,700 years, came to the conclusion that the Earth continues slow [1].

Cause slowing of the Earth are called by many factors. These include the gravitational influence of the moon and sun, braking cosmic dust, atmospheric and geophysical processes and many other physical phenomena.

In this paper, conventional explanations irregular rotation of the earth understood as an unproven and (or) is negligibly small. External gravitational influences or atmospheric effects can not only slow, but also accelerate the Earth's rotation.

The genesis of our planet, including the slowing of its rotation, fully explained by the theory of vortex gravitation, cosmology and cosmogony [2] and the laws of mechanics.

For greater clarity, the readers, the next chapter outlines the principles of the theory of vortex gravitation.

II. Theory Vortex Gravitation

Vortex gravitation theory [2] is based on the well-known astronomical facts - all celestial objects revolve. The most logical explanation of the cause of this movement can be only one - the rotation of celestial objects spawned vortex rotation of cosmic matter – ether. Ether forms a global system of interconnected space vortices. Orbital velocity in each vortex ether (torsion), decreasing from the center to the periphery of the law of the inverse square of the removal. According to the laws of aerodynamics - the slower the rate, the more pressure there. The pressure gradient generates a force pushing towards the zone with the lowest pressure - to the center of the torsion bar. Look fig. 1. Thus accumulates in the center of the torsion or created cosmic matter of which is generated by a celestial body.

Consider the equation of vortex gravitation theory obtained in [2].

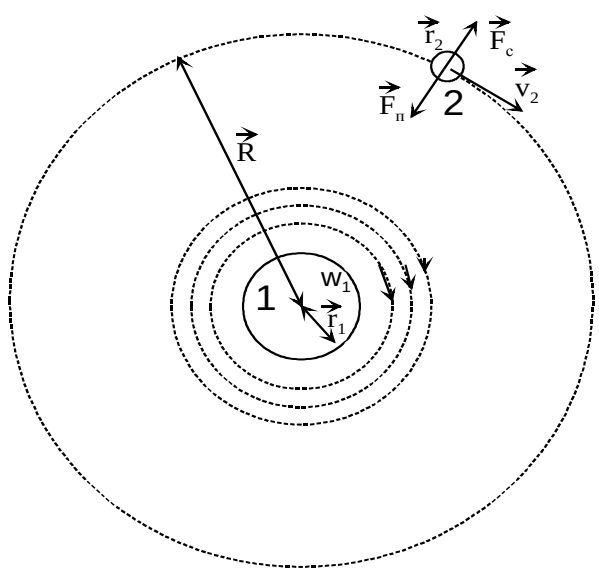

Figure 1 : Two-dimensional model of the gravitational interaction between the two bodies

Author: Petrozavodsk State University. e-mail: ion@sampo.ru

© 2014 Global Journals Inc. (US)

Shown forces acting on the body 2. F_c-centrifugal force F_n-attraction force of body 2 to body 1, v_2-linear velocity of a body in orbit 2, R - radius of the orbit, r_1 - radius of the body 1, r_2 - radius of the body 2, w_1 - the angular velocity of rotation of the ether on the surface of the body 1, m_2 - mass of the body 2.

As already mentioned, the result of motion of the vortex pressure gradient arises. Radial distribution of pressure and velocity in the ether [2] defined on the basis of the Navier-Stokes equations for the motion of a viscous fluid (gas).

$$\rho\left[\frac{\partial}{\partial t}+\vec{v}\cdot \mathrm{grad}\right]\vec{v}=\vec{F}-\mathrm{grad}\,P+\eta\Delta\vec{v} \tag{1}$$

In cylindrical coordinates, taking into account the radial symmetry $v_r = v_z = 0 = v(r)$, $P = P(r)\varphi$, equation can be written as a system.

$$\begin{cases} -\dfrac{v(r)^2}{r}=-\dfrac{1}{\rho}\dfrac{dP}{dr} \\ \eta\cdot\left(\dfrac{\partial^2 v(r)}{\partial r^2}+\dfrac{\partial v(r)}{r\,\partial r}-\dfrac{v(r)}{r^2}\right)=0 \end{cases} \tag{2}$$

Where $\rho = 8.85 \times 10^{-12}$ kg \ m^3 - the density of [3], V - ether velocity vector, P - pressure ether, η - viscosity.

In cylindrical coordinates module gravity

$$F_п = V\cdot\frac{\partial P}{\partial r} \tag{3}$$

Then comparing (2) and (3) for an incompressible ether (ρ = const), we find that

$$F_п = V\cdot\rho\cdot\frac{v(r)^2}{r} \tag{4}$$

The assumption № 1 - Ether pervades all space, including the physical body except nucleons. Volume V in the formula (4) - an effective volume - the volume of the elementary particles that make up the body 2. All bodies are composed of electrons, protons and neutrons. Radius of the electron is much smaller than the radius of the proton and the neutron radius is approximately the same and the last of the order $r_n \sim 1.2\cdot 10^{-15}$ m masses of the proton and neutron are approximately the same as $m_n \sim 1.67\cdot 10^{-27}$ kg (rn, mn - the radius and mass of the nucleon).

After the necessary transformations (full payment is set out in the theory [2]) is obtained:

1. Equation for determining the force of gravity depending on the rotational speed ether

$$F_п = \frac{4\cdot\pi\cdot r_n^{\,3}\cdot\rho}{3\cdot m_n}\cdot\frac{w_1^{\,2}\cdot r_1^{\,3}\cdot m_2}{r^2} \tag{5}$$

r_n, m_n - the radius and mass of the nucleon.

2. Equations for determining the dependence of the pressure on the body surface P_0, the rotational speed ether

$$P_0 = P_b-\rho\cdot w_1^{\,2}\cdot r_1^{\,2} \tag{6}$$

Where P_0 - ether pressure at the surface of the body, using the boundary condition $P(\infty)=P_b$ P_b-free ether pressure.

Fig. 2 is a graph showing the pressure distribution in accordance with formula (6).

© 2014 Global Journals Inc. (US)

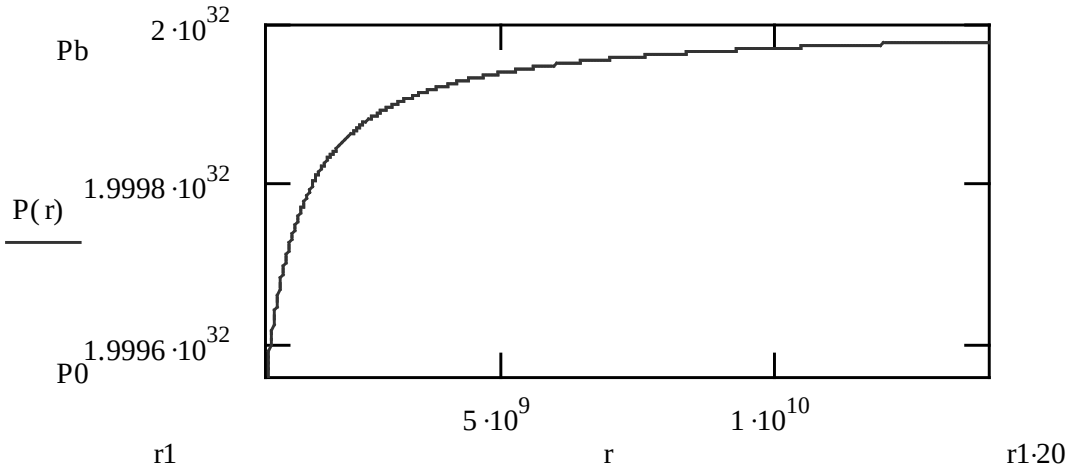

Figure 2 : Radial distribution of ether pressure for the Sun

III. Changes in Volume and Mass of the Earth

According to the theory of vortex gravitation, cosmology and cosmogony, the initial moment of the appearance of any celestial body was the emergence of space, ether vortex. At the time of its inception, each vortex created his vortex gravity (Chapter 2). Vortex gravity can be regarded as "generator world of matter" that sucks and (or) creates a vortex inside the elementary particles. Thus, the mass of each celestial object in the initial moment of its existence, was equal to the mass of the cosmic ether, from which it was formed vortex. Since the density of the ether is negligible, then the mass of each of the newly formed vortex ether should be close to zero. Consequently, each celestial body in the history of its existence, increased its weight from "zero conditional" to these values. It is worth noting an important condition - cosmic whirlwind unopposed, constantly maintained and retains its original speed (see assumption. № 1).

Therefore, the space whirlwind constantly generates the same mass of substance. That is any celestial body increases the weight by a constant.

Modern studies customary slowing the Earth's rotation value 0.00002 seconds in each year [1]. Then the relative increase in time for the Earth's rotation around its axis is increased by a factor K_t.

$$K_t = (24 \times 60 \times 60 + 0{,}00002) \times (24 \times 60 \times 60)^{-1} = 1 + 2{,}314 \times 10^{-10}$$

By increasing the time for one revolution of the earth is inversely proportional to the rotational speed decreases Ve. Then the relative decrease in the rate of rotation of Kv can be expressed as

$$K_v = K_t^{-1} = (1 + 2{,}314 \times 10^{-10})^{-1} \qquad (7)$$

Further calculations are based on the law of conservation of angular momentum the Earth's rotation around its axis.

$$M\, V_v\, R_e = \text{const} \qquad (8)$$

M-mass of the planet,
V_v-the speed of rotation of the planet,
R_e-the radius of the planet.
From equation (8)

$$M\, V_v\, R_e = (Km\, M)\,(Kv_v\, V_v)\,(Kr_e\, R_e) = \text{const}$$

Where the coefficients K_m, K_{vv}, K_{re} - show the relative changes in the values M, V_v, R_e. Hence

$$Km\, Kv_v\, Kr_e = 1 \qquad (9)$$

Substituting (7) into (9) we obtain

$$K_m\, K_{re} = 1 + 2{,}314 \times 10^{-10} \qquad (10)$$

Planet mass (M), as well as its volume (V) is proportional to the radius of the planet in the cube.

$$M \sim V \sim Re^3 \quad \text{here}$$

$$Kr_e^{\,3} = K_m \qquad (11)$$

Substituting (11) into (10)

$$K_r^{\,4} = 1 + 2{,}314 \times 10^{-10} \quad \text{or}$$

$$K_r = (1 + 2{,}314 \times 10^{-10})^{1/4} = 1 + 5{,}785 \times 10^{-11} \qquad (12)$$

Substituting (12) into (10) we determine the relative increase in the mass of the Earth –

$$K_m = 1 + 1{,}735 \times 10^{-10} \qquad (13)$$

To determine the absolute values of the physical characteristics of the Earth

© 2014 Global Journals Inc. (US)

1. At rotation speed of the Earth surface at the equator V_v = 465,1 m/s annual slowdown will

$$465{,}1 \times 2{,}314 \times 10^{-10} = 9{,}3 \times 10^{-8} \text{ м/сек} \qquad (14)$$

2. When the radius of the Earth Re = 6371000 m annual increase in the radius of the Earth

$$6371000 \times 5{,}785 \times 10^{-11} = 3{,}7 \times 10^{-4} \text{ м или } 0{,}37 \text{ мм/год} \qquad (15)$$

3. When the mass of the Earth M = 5.9736×10^{24} kg annual weight gain

$$5{,}9736 \times 10^{24} \times 1.735 \times 10^{-10} = 1{,}036 \times 10^{15} \text{ кг} \qquad (16)$$

4. Increased Earth

The surface area of the Earth $S_v = 4\ M\ R^2$. Increasing the radius of - 3.7×10^{-4} m. Then the volume of the Earth increases by -

$$4\ \Pi\ R^2 \times 3{,}7 \times 10^{-4} = 4 \times 3.14 \times (6{,}371 \times 10^6)^2 \times 3{,}7 \times 10^{-4} = 1{,}886 \times 10^{11} \text{ м}^3 \qquad (17)$$

5. Additional mass density

$$P = 3{,}456 \times 10^{14} \times (1{,}835 \times 10^{11})^{-1} = 1883 \text{ кг/м}^3 \qquad (18)$$

Note: The absolute values of the above characteristics of the Earth is only valid in the present historical moment, as the speed, radius and mass of the planet are constantly changing.

IV. Mass and Age of the Earth, Orbital and Radial Motion

Earth's mass is constantly increasing the amount of (13)

$$K_m = 1.735 \times 10^{-10} \times M$$

No outside forces act on the planet. Therefore, legitimate to use the law of conservation of angular momentum of the Earth around the Sun.

$$M\ V_o\ R_o = \text{const} \quad \text{where}$$

$$K_m\ K_{vo}\ K_{ro} = 1 \qquad (19)$$

M - mass of the Earth

V_o - the orbital speed of the Earth

R_o - radius of Earth's orbit.

K_m, K_{vo}, K_{ro} - rate of change in the Earth's mass units, the speed of its revolution around the Sun and the orbit radius.

According to Kepler's law $V \sim R_o^{-1/2}$, we can write

$$K_{vo} = K_r^{-1/2} \qquad (20)$$

Substitute (20) into (19)

$$Kr_o = Km^{-2} = (1 + 1.735 \times 10^{-10})^{-2} = (1 + 3{,}47 \times 10^{-10})^{-1} \qquad (21)$$

Substituting (21) and (13) into equation (19) we obtain

$$Kv_o = (Km \times Kr_o)^{-1} = (1 + 3{,}47 \times 10^{-10}) \times (1 + 1.735 \times 10^{-10})^{-1} = 1 + 1.735 \times 10^{-10} \qquad (22)$$

Mass of the planet increases always constant. Therefore, by dividing the mass of the Earth on its permanent annual increase ($M \times 1.735 \times 10^{-10}$), we obtain the age of the planet

$$T = M \times (M \times Km)^{-1} = M \times (M \times 1.735 \times 10^{-10})^{-1} = (1{,}735 \times 10^{-10})^{-1} = 5{,}76 \text{ млрд. лет}$$

Radioisotope dating [4] established the age of the planet size of 4.54 billion years. It should be noted that the radioisotope dating explored only the surface layers of the planet. Therefore, the results of these studies (age) can be attributed only to the same surface layers.

The proposed method of determining the age of the planet considering as a single physical object, which increases the reliability of its results.

Annual approaching the Earth's orbit to the Sun

$$R_o \times K_{ro} = 15 \times 10^{10} \times 3{,}47 \times 10^{-10} = 52{,}05 \text{ м/год}$$

One revolution of the Earth around the sun (one year) is reduced by:

$$365{,}24 \text{ (сут)} \times 24 \times 60 \times 60 \times 1{,}735 \times 10^{-10} = 0{,}0054 \text{ сек/год}$$

© 2014 Global Journals Inc. (US)

V. Past and the Future of the Planet

Calculation of physical properties in the past and in the future.

a) 1 000 000 000 years ago

i. *The rotation of the planet*

Mass of the planet a billion years ago - 1,036 x 10^{15} (kg) x (4.76 x 10^{9}) (s) = 4.93 x 10^{24}kg

Mass ratio - K_{m-1} = 4.93 x 1024/5, 97 x 1024 = 0,826

The relative change Earth radius - $K_{r-1} = (K_{m-1})^{1/3} = (o, 826)^{1/3} = 0.94$

From equation (19), - $K_{v-1} = (K_r \times K_{m-1})^{-1} = (0.826 \times 0.94)^{-1} = 1.288$

Absolute values of the planet a billion years ago.

Since the velocity of the planet was more than 1,288 times in,

Length of day a billion years ago - 18.6 hours

Radius of the planet was less than 0.94 times or

$$R_{-1} = 6{,}371 \times 10^{6} \times 0{,}94 = 5{,}988 \times 10^{6} \text{ м}$$

Consequently, the force of gravity was greater in $(0.94)^{-1/2} = (0.88)^{-1}$ times. That is – F_{-1} = 11,1 m

ii. *Handling the planet*

Using formulas 20, 21, 22 and K_{m-1} = 0.826, we find:

- The relative decrease in orbital velocity (1 billion years ago) –

$$K_{vo-1} = 0{,}96$$

- The ratio of the radii of K_{ro-1} = 1.075
- Radius of the orbit billion years ago

$$R_{o-1} = R \times K_{ro-1} = 15 \times 10^{10} \times 1{,}075 = 161{,}25 \text{ млн. км}$$

The number of days (18.6 hours). Per revolution (one year) - 527 days.

b) After 1 000 000 000 years in the future

i. *The rotation of the planet*

Mass of the planet a billion years - 1,036 x 10^{15} (kg) x 6,76 x 10^{9}(years) = 7,0 x 10^{24} kg

Changing the masses - K_{m+1} = 7,0 x 10^{24}/5,97 x 10^{24} = 1,173

The relative change

radius of the Earth - $K_{r+1} = (K_{m+1})^{1/3} = (1{,}173)^{1/3} = 1{,}055$

From equation (19), - $K_{v+1} = (K_{r+1} \times K_{m+1})^{-1} = (1{,}055 \times 1{,}173)^{-1} = 0{,}81$

The absolute values of the properties in the future of the planet in a billion years. Since the rotation speed of the planets will be less than 0.81 times, then

Length of the day - 29.6 hours

Radius of the planet - R_{+1} = 6,721 x 10^{6} m

The gravitational force F = 8,8 m

ii. *Handling the planet*

Using formulas 20, 21, 22 and Km +1 = 1,173, we find: -The relative increase in orbital velocity (in billion years in the future)

$$K_{vo+1} = 1{,}042$$

- relation of orbital radiuses $K_{ro+1} = 0{,}92$

© 2014 Global Journals Inc. (US)

iii. *Radius of the orbit*

$$R_{o-1} = R \times K_{ro+1} = 15 \times 10^{10} \times 0{,}92 = 138 \text{ млн. км}$$

Duration of one turn (one year) - 261.2 day.

Note 1 The proposed calculation of the radius of Earth's orbit are valid only if the orbital plane is considered a celestial body (the Earth) coincides with the center plane of the gravitational aether vortex. In the event of the orbital plane of the celestial body of the plane gravitational torsion vortex gravitation force is reduced in proportion to the cube of the cosine of the deviation. A detailed calculation of this dependence is presented in the theory of vortex gravitation [2].

Orbital plane of the Earth's gravity deviates from the plane by 1 degree {2}. Consequently, the tops of the small semiaxes earth orbit force swirl solar gravity decreases by 0.045% in comparison with the magnitude of gravity, which was determined by the classical equations. Therefore, changing the radius of the orbit of the Earth or the duration of the year in the past or the future, calculated in this article actually have smaller values.

For large deviations of the orbital planes of any celestial object and the long duration of their existence can remove the orbital trajectories of these objects from the call center. Such removal (38 mm per year) is currently seen in the moon.

VI. Creation of Substance of the Planet

Most modern scholars explain the increased mass of the planet and meteorite dust flux of cosmic matter on Earth. The magnitude of this cosmic matter is determined by researchers in the order of several tens of thousands of tons (10^7kg) per year. In this paper we calculated that the observed slowing rotation of the planet can only be achieved by increasing the mass of the planet at 1,036 x 10^{15} kg per year (16). This calculated weight exceeds the estimated mass of cosmic matter that falls to Earth from space, hundreds of millions of times. Consequently, the total mass of cosmic dust and meteorites falling annually on our planet, is negligible. Therefore, the study of increasing the mass of the Earth, the mass of meteorites can be neglected and consider another source of creation of matter.

Based on the principles of vortex gravitation and cosmogony - the substance of all celestial bodies (elementary particles) create ethereal vortices.

Consider the principles of vortex cosmogony.

According to the theory of ether-dynamics [3], the following parameters of the ether:

- Pressure in the quiet, motionless air – $2x10^{32}$ n m^{-2}
- Ether density $\rho = 8.85x10^{-12}$ kg \ m^3

On the basis of equation (6) at a speed of ether v0 = 4,75 x 10^{21} Earth torsion pressure should drop to zero (Fig. 2).

We define the radius of the orbit of the Earth torsion with zero pressure.

On the basis of equation (5) determine the rotational velocity of the ether on the Earth's surface is v_e = 1.277 x 10^{18} m/c. Transform equation (20) -

$$V^2_0 / v^2_e = r_e / r_0, \quad \text{where}$$

v_e = 1.277x10^{18} м/c - The orbital velocity of the ether on the surface of the Earth

v_0 = 4,75x10^{21} м/c – ether velocity in orbit with zero pressure

r_e = 6371000 m - radius of the Earth

r_0 - earth orbit radius of the vortex, where the pressure is zero (no orbit).

Substituting the known values of v_0, v_e, r_e, define r_0.

$$r0 = 0{,}46 \text{ м}$$

Zero pressure in the Earth's orbit to any torsion means cessation of ether motion on this orbit, which caused reduction (increase) in ether pressure to the initial value in the quiescent state - 2 x 10^{32} N m^{-2}.

Note: Meteorologists note full tranquillity (calm) in the center of tropical or sea storms. These phenomena are called "a storm eye".

The sharp increase in pressure in the central orbits torsion in these areas will create a vortex anti gravity force directed from the center of the torsion of the orbit with zero pressure (46cm).

Thus, on the above, the zero orbit the Earth torsion, on both sides, there are two huge forces over the vortex gravitation. From equation (5) determine the gravitational force (F_0) in the Earth's orbit on the torsion bar with a radius of 0.46 m.

$$F_0 = 1{,}9 \times 10^{15} \text{ m}$$

Two opposite forces of gravity give rise to corresponding compression forces that cause the seal over rarefied ether to super dense state. Thus, in the center of any cosmic torsion created over dense core, which does not pass through it no radiation, including air. In the downtown core - the emptiness. At the same time, the core material is impermeable barrier to the orbital rotation of the ether on the orbits of the orbit below the outer surface of the core. When driving close to the surface of the ether in its core flow turbulence arises, twist and many micro vortices. These micro vortices similar planetary torsion, its own gravity pulls and seals the outer gaseous. In the center of micro-torsions particle density reaches the nucleon density - 10^{17} kg/m3. It should be noted that the establishment of micro-torsions occur at higher orbits the Earth torsion than the orbit of the nucleus. Vortex gravitation force decreases with increasing orbit. This allows not only nucleons, but also atoms. Continuously generated by the atoms of various substances in the central space of the vortex, generate celestial bodies. Throughout the

© 2014 Global Journals Inc. (US)

history of the mega all the heavenly bodies the formation of atoms - continuous. Pouring into the magma, the newly formed atoms constantly "feed" the heavenly bodies more weight. Magma periodically overflowing through the Earth's crust cracks comes to the surface as lava. Geologists estimate the total mass of lava poured out a year tens of cubic kilometers, or 10^{12} cubic meters. The average population density in the order of lava 10^3 kg\m^3, its mass is measured about 10^{15} kg.

Consequently, the actual mass of lava poured out annually, representing an increase of mass of the planet, according to the proposed settlement. This proves the accuracy of the proposed study on age and change in the physical parameters of the Earth.

The mere appearance of the substance (lava) from the depths of the planet proves that the substance appeared in the bowels of the earth, and was not delivered from space. This statement is obvious as meteorites or a space dust can't get in a planet body.

Continuous creation of substance from ether in a planet possibly only at continuous inflow of ether to the planetary torsion. We will determine the volume of ether necessary for creation of 10^{15} kg of planetary substance.

Increases in mass of Earth has to be equal to the mass of ether from which this additional mass of a planet was created. If we share quantity of annual increase in mass of Earth into ether density, we will determine the volume of ether which annually is required for substance weighing 10^{15} creation.

$$Ve = m/\rho = 10^{15} / 8.85 \times 10^{-12} = 1{,}13 \times 10^{26}\ m^3$$

This volume corresponds to the volume of the erther's torsion with a radius of 1 million km and with an axial thickness of 100 thousand km.

All of the above principles of vortex cosmogony apply to all celestial bodies in our universe.

The main conclusion of Chapter 6 - the substance is created by cosmic vortices of ether inside of celestial bodies. Moving the matter in the universe from one celestial body to another has only a minor character and the physical properties of celestial bodies affect.

Generated in the Earth's core atoms of chemical elements are constantly overwhelmed this kernel and create a giant pressure overlying layers of the planet. This pressure exceeds in magnitude the opposite direction to him the gravitational pull of the Earth. Thus, the overlying layers of the earth continuously shifted by the lower layers towards the surface. During this movement, the chemical elements at certain depths enter the geophysical processes and form we all known inorganic compound - rock, hydrocarbons, water, and other gases. At a certain moment in history, these deposits are close to the earth's crust, or come to the surface of the Earth. Consequently, all the necessary human civilization minerals - inexhaustible. In place of the explored and develop hydrocarbons, diamonds, gold and other precious natural resources for humans, the Earth will create new and thrust them out of their depth in the crust or on the surface.

The proposed principles of inorganic matter, just as likely to apply to the creation of an organic substance. In certain earth formations on (at) the required depth, pressure and temperature are extreme physical conditions which permit the synthesis of organic molecules and their compounds. Obviously, on the surface of planets create conditions impossible.

Consequently, there can not be a synthesis of organic matter. Organic matter, since its inception in the depths of the heavenly bodies, in certain historical moments erupts on the surface of the Earth, together with inorganic substances. If the earth's surface are favorable physical conditions, the beginnings of organic life to develop their perfect forms.

The above principles of creation of organic matter integrates and complements a well-known theory of the creation of life - panspermia and / or the evolution of life on Earth. Ether is the only substance for the generation of all the atoms and molecules. Thus ether moves over the universe with great speed. Therefore, ether can be regarded as the basis of panspermia. Existing theories of the creation of organic life can not explain what and how to become lifeless into living tissue. For the development of the ether in the living or non-living body, that is, for their conception and evolution required extreme conditions that can only be created inside the celestial body and the corresponding vortex. Thus, space, ether vortices - the Creator of all the known forms and types of matter.

References Références Referencias

1. Journal for the History of Astronomy (b. 39, page. 229, 2008).
2. S. Orlov. *Foundation of vortex gravitation, cosmology and cosmogony.* Global journal of science Frontier research. Physic and Space Science Volume 12 issue 1 Version 1.0 January 2012.
3. V A Atsurovskiy. General ether-dynamics. Energoatomizdat. Moscow, Russia. 1990. Page 278.
4. *Dalrymple, G. Brent (2001). «The age of the Earth in the twentieth century: a problem (mostly) solved». Special Publications, Geological Society of London 190: 205–221.* DOI:10.1144/GSL.SP.2001.190.01.14.

© 2014 Global Journals Inc. (US)

Global Journals Inc. (US) Guidelines Handbook 2014

www.GlobalJournals.org

FELLOWS

FELLOW OF ASSOCIATION OF RESEARCH SOCIETY IN SCIENCE (FARSS)

Global Journals Incorporate (USA) is accredited by Open Association of Research Society (OARS), U.S.A and in turn, awards "FARSS" title to individuals. The 'FARSS' title is accorded to a selected professional after the approval of the Editor-in-Chief/Editorial Board Members/Dean.

- The "FARSS" is a dignified title which is accorded to a person's name viz. Dr. John E. Hall, Ph.D., FARSS or William Walldroff, M.S., FARSS.

FARSS accrediting is an honor. It authenticates your research activities. After recognition as FARSB, you can add 'FARSS' title with your name as you use this recognition as additional suffix to your status. This will definitely enhance and add more value and repute to your name. You may use it on your professional Counseling Materials such as CV, Resume, and Visiting Card etc.

The following benefits can be availed by you only for next three years from the date of certification:

FARSS designated members are entitled to avail a 40% discount while publishing their research papers (of a single author) with Global Journals Incorporation (USA), if the same is accepted by Editorial Board/Peer Reviewers. If you are a main author or co-author in case of multiple authors, you will be entitled to avail discount of 10%.

Once FARSB title is accorded, the Fellow is authorized to organize a symposium/seminar/conference on behalf of Global Journal Incorporation (USA). The Fellow can also participate in conference/seminar/symposium organized by another institution as representative of Global Journal. In both the cases, it is mandatory for him to discuss with us and obtain our consent.

You may join as member of the Editorial Board of Global Journals Incorporation (USA) after successful completion of three years as Fellow and as Peer Reviewer. In addition, it is also desirable that you should organize seminar/symposium/conference at least once.

We shall provide you intimation regarding launching of e-version of journal of your stream time to time.This may be utilized in your library for the enrichment of knowledge of your students as well as it can also be helpful for the concerned faculty members.

The FARSS can go through standards of OARS. You can also play vital role if you have any suggestions so that proper amendment can take place to improve the same for the benefit of entire research community.

As FARSS, you will be given a renowned, secure and free professional email address with 100 GB of space e.g. johnhall@globaljournals.org. This will include Webmail, Spam Assassin, Email Forwarders,Auto-Responders, Email Delivery Route tracing, etc.

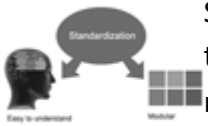

The FARSS will be eligible for a free application of standardization of their researches. Standardization of research will be subject to acceptability within stipulated norms as the next step after publishing in a journal. We shall depute a team of specialized research professionals who will render their services for elevating your researches to next higher level, which is worldwide open standardization.

The FARSS member can apply for grading and certification of standards of their educational and Institutional Degrees to Open Association of Research, Society U.S.A. Once you are designated as FARSS, you may send us a scanned copy of all of your credentials. OARS will verify, grade and certify them. This will be based on your academic records, quality of research papers published by you, and some more criteria. After certification of all your credentials by OARS, they will be published on your Fellow Profile link on website https://associationofresearch.org which will be helpful to upgrade the dignity.

The FARSS members can avail the benefits of free research podcasting in Global Research Radio with their research documents. After publishing the work, (including published elsewhere worldwide with proper authorization) you can upload your research paper with your recorded voice or you can utilize chargeable services of our professional RJs to record your paper in their voice on request.

The FARSS member also entitled to get the benefits of free research podcasting of their research documents through video clips. We can also streamline your conference videos and display your slides/ online slides and online research video clips at reasonable charges, on request.

© Copyright by Global Journals Inc.(US)| Guidelines Handbook

The FARSS is eligible to earn from sales proceeds of his/her researches/reference/review Books or literature, while publishing with Global Journals. The FARSS can decide whether he/she would like to publish his/her research in a closed manner. In this case, whenever readers purchase that individual research paper for reading, maximum 60% of its profit earned as royalty by Global Journals, will be credited to his/her bank account. The entire entitled amount will be credited to his/her bank account exceeding limit of minimum fixed balance. There is no minimum time limit for collection. The FARSS member can decide its price and we can help in making the right decision.

The FARSS member is eligible to join as a paid peer reviewer at Global Journals Incorporation (USA) and can get remuneration of 15% of author fees, taken from the author of a respective paper. After reviewing 5 or more papers you can request to transfer the amount to your bank account.

MEMBER OF ASSOCIATION OF RESEARCH SOCIETY IN SCIENCE (MARSS)

The ' MARSS ' title is accorded to a selected professional after the approval of the Editor-in-Chief / Editorial Board Members/Dean.

The “MARSS” is a dignified ornament which is accorded to a person’s name viz. Dr. John E. Hall, Ph.D., MARSS or William Walldroff, M.S., MARSS.

MARSS accrediting is an honor. It authenticates your research activities. After becoming MARSS, you can add 'MARSS' title with your name as you use this recognition as additional suffix to your status. This will definitely enhance and add more value and repute to your name. You may use it on your professional Counseling Materials such as CV, Resume, Visiting Card and Name Plate etc.

The following benefitscan be availed by you only for next three years from the date of certification.

MARSS designated members are entitled to avail a 25% discount while publishing their research papers (of a single author) in Global Journals Inc., if the same is accepted by our Editorial Board and Peer Reviewers. If you are a main author or co-author of a group of authors, you will get discount of 10%.

As MARSS, you will be given a renowned, secure and free professional email address with 30 GB of space e.g. johnhall@globaljournals.org. This will include Webmail, Spam Assassin, Email Forwarders,Auto-Responders, Email Delivery Route tracing, etc.

We shall provide you intimation regarding launching of e-version of journal of your stream time to time.This may be utilized in your library for the enrichment of knowledge of your students as well as it can also be helpful for the concerned faculty members.

The MARSS member can apply for approval, grading and certification of standards of their educational and Institutional Degrees to Open Association of Research, Society U.S.A.

Once you are designated as MARSS, you may send us a scanned copy of all of your credentials. OARS will verify, grade and certify them. This will be based on your academic records, quality of research papers published by you, and some more criteria.

It is mandatory to read all terms and conditions carefully.

Auxiliary Memberships

Institutional Fellow of Global Journals Incorporation (USA)-OARS (USA)

Global Journals Incorporation (USA) is accredited by Open Association of Research Society, U.S.A (OARS) and in turn, affiliates research institutions as "Institutional Fellow of Open Association of Research Society" (IFOARS).

The "FARSC" is a dignified title which is accorded to a person's name viz. Dr. John E. Hall, Ph.D., FARSC or William Walldroff, M.S., FARSC.

The IFOARS institution is entitled to form a Board comprised of one Chairperson and three to five board members preferably from different streams. The Board will be recognized as "Institutional Board of Open Association of Research Society"-(IBOARS).

The Institute will be entitled to following benefits:

The IBOARS can initially review research papers of their institute and recommend them to publish with respective journal of Global Journals. It can also review the papers of other institutions after obtaining our consent. The second review will be done by peer reviewer of Global Journals Incorporation (USA) The Board is at liberty to appoint a peer reviewer with the approval of chairperson after consulting us.

The author fees of such paper may be waived off up to 40%.

The Global Journals Incorporation (USA) at its discretion can also refer double blind peer reviewed paper at their end to the board for the verification and to get recommendation for final stage of acceptance of publication.

The IBOARS can organize symposium/seminar/conference in their country on behalf of Global Journals Incorporation (USA)-OARS (USA). The terms and conditions can be discussed separately.

The Board can also play vital role by exploring and giving valuable suggestions regarding the Standards of "Open Association of Research Society, U.S.A (OARS)" so that proper amendment can take place for the benefit of entire research community. We shall provide details of particular standard only on receipt of request from the Board.

The board members can also join us as Individual Fellow with 40% discount on total fees applicable to Individual Fellow. They will be entitled to avail all the benefits as declared. Please visit Individual Fellow-sub menu of GlobalJournals.org to have more relevant details.

© Copyright by Global Journals Inc.(US) | Guidelines Handbook

We shall provide you intimation regarding launching of e-version of journal of your stream time to time. This may be utilized in your library for the enrichment of knowledge of your students as well as it can also be helpful for the concerned faculty members.

After nomination of your institution as "Institutional Fellow" and constantly functioning successfully for one year, we can consider giving recognition to your institute to function as Regional/Zonal office on our behalf.
The board can also take up the additional allied activities for betterment after our consultation.

The following entitlements are applicable to individual Fellows:

Open Association of Research Society, U.S.A (OARS) By-laws states that an individual Fellow may use the designations as applicable, or the corresponding initials. The Credentials of individual Fellow and Associate designations signify that the individual has gained knowledge of the fundamental concepts. One is magnanimous and proficient in an expertise course covering the professional code of conduct, and follows recognized standards of practice.

Open Association of Research Society (US)/ Global Journals Incorporation (USA), as described in Corporate Statements, are educational, research publishing and professional membership organizations. Achieving our individual Fellow or Associate status is based mainly on meeting stated educational research requirements.

Disbursement of 40% Royalty earned through Global Journals : Researcher = 50%, Peer Reviewer = 37.50%, Institution = 12.50% E.g. Out of 40%, the 20% benefit should be passed on to researcher, 15 % benefit towards remuneration should be given to a reviewer and remaining 5% is to be retained by the institution.

We shall provide print version of 12 issues of any three journals [as per your requirement] out of our 38 journals worth $ 2376 USD.

Other:

The individual Fellow and Associate designations accredited by Open Association of Research Society (US) credentials signify guarantees following achievements:

- The professional accredited with Fellow honor, is entitled to various benefits viz. name, fame, honor, regular flow of income, secured bright future, social status etc.

- In addition to above, if one is single author, then entitled to 40% discount on publishing research paper and can get 10%discount if one is co-author or main author among group of authors.
- The Fellow can organize symposium/seminar/conference on behalf of Global Journals Incorporation (USA) and he/she can also attend the same organized by other institutes on behalf of Global Journals.
- The Fellow can become member of Editorial Board Member after completing 3yrs.
- The Fellow can earn 60% of sales proceeds from the sale of reference/review books/literature/publishing of research paper.
- Fellow can also join as paid peer reviewer and earn 15% remuneration of author charges and can also get an opportunity to join as member of the Editorial Board of Global Journals Incorporation (USA)
- • This individual has learned the basic methods of applying those concepts and techniques to common challenging situations. This individual has further demonstrated an in–depth understanding of the application of suitable techniques to a particular area of research practice.

Note :

"

- In future, if the board feels the necessity to change any board member, the same can be done with the consent of the chairperson along with anyone board member without our approval.
- In case, the chairperson needs to be replaced then consent of 2/3rd board members are required and they are also required to jointly pass the resolution copy of which should be sent to us. In such case, it will be compulsory to obtain our approval before replacement.
- In case of "Difference of Opinion [if any]" among the Board members, our decision will be final and binding to everyone. "

Process of submission of Research Paper

The Area or field of specialization may or may not be of any category as mentioned in 'Scope of Journal' menu of the GlobalJournals.org website. There are 37 Research Journal categorized with Six parental Journals GJCST, GJMR, GJRE, GJMBR, GJSFR, GJHSS. For Authors should prefer the mentioned categories. There are three widely used systems UDC, DDC and LCC. The details are available as 'Knowledge Abstract' at Home page. The major advantage of this coding is that, the research work will be exposed to and shared with all over the world as we are being abstracted and indexed worldwide.

The paper should be in proper format. The format can be downloaded from first page of 'Author Guideline' Menu. The Author is expected to follow the general rules as mentioned in this menu. The paper should be written in MS-Word Format (*.DOC,*.DOCX).

The Author can submit the paper either online or offline. The authors should prefer online submission.Online Submission: There are three ways to submit your paper:

(A) (I) First, register yourself using top right corner of Home page then Login. If you are already registered, then login using your username and password.

(II) Choose corresponding Journal.

(III) Click 'Submit Manuscript'. Fill required information and Upload the paper.

(B) If you are using Internet Explorer, then Direct Submission through Homepage is also available.

(C) If these two are not conveninet , and then email the paper directly to dean@globaljournals.org.

Offline Submission: Author can send the typed form of paper by Post. However, online submission should be preferred.

Preferred Author Guidelines

MANUSCRIPT STYLE INSTRUCTION (Must be strictly followed)

Page Size: 8.27" X 11'"

- Left Margin: 0.65
- Right Margin: 0.65
- Top Margin: 0.75
- Bottom Margin: 0.75
- Font type of all text should be Swis 721 Lt BT.
- Paper Title should be of Font Size 24 with one Column section.
- Author Name in Font Size of 11 with one column as of Title.
- Abstract Font size of 9 Bold, "Abstract" word in Italic Bold.
- Main Text: Font size 10 with justified two columns section
- Two Column with Equal Column with of 3.38 and Gaping of .2
- First Character must be three lines Drop capped.
- Paragraph before Spacing of 1 pt and After of 0 pt.
- Line Spacing of 1 pt
- Large Images must be in One Column
- Numbering of First Main Headings (Heading 1) must be in Roman Letters, Capital Letter, and Font Size of 10.
- Numbering of Second Main Headings (Heading 2) must be in Alphabets, Italic, and Font Size of 10.

You can use your own standard format also.
Author Guidelines:

1. General,

2. Ethical Guidelines,

3. Submission of Manuscripts,

4. Manuscript's Category,

5. Structure and Format of Manuscript,

6. After Acceptance.

1. GENERAL

Before submitting your research paper, one is advised to go through the details as mentioned in following heads. It will be beneficial, while peer reviewer justify your paper for publication.

Scope

The Global Journals Inc. (US) welcome the submission of original paper, review paper, survey article relevant to the all the streams of Philosophy and knowledge. The Global Journals Inc. (US) is parental platform for Global Journal of Computer Science and Technology, Researches in Engineering, Medical Research, Science Frontier Research, Human Social Science, Management, and Business organization. The choice of specific field can be done otherwise as following in Abstracting and Indexing Page on this Website. As the all Global

Journals Inc. (US) are being abstracted and indexed (in process) by most of the reputed organizations. Topics of only narrow interest will not be accepted unless they have wider potential or consequences.

2. ETHICAL GUIDELINES

Authors should follow the ethical guidelines as mentioned below for publication of research paper and research activities.

Papers are accepted on strict understanding that the material in whole or in part has not been, nor is being, considered for publication elsewhere. If the paper once accepted by Global Journals Inc. (US) and Editorial Board, will become the copyright of the Global Journals Inc. (US).

Authorship: The authors and coauthors should have active contribution to conception design, analysis and interpretation of findings. They should critically review the contents and drafting of the paper. All should approve the final version of the paper before submission

The Global Journals Inc. (US) follows the definition of authorship set up by the Global Academy of Research and Development. According to the Global Academy of R&D authorship, criteria must be based on:

1) Substantial contributions to conception and acquisition of data, analysis and interpretation of the findings.

2) Drafting the paper and revising it critically regarding important academic content.

3) Final approval of the version of the paper to be published.

All authors should have been credited according to their appropriate contribution in research activity and preparing paper. Contributors who do not match the criteria as authors may be mentioned under Acknowledgement.

Acknowledgements: Contributors to the research other than authors credited should be mentioned under acknowledgement. The specifications of the source of funding for the research if appropriate can be included. Suppliers of resources may be mentioned along with address.

Appeal of Decision: The Editorial Board's decision on publication of the paper is final and cannot be appealed elsewhere.

Permissions: It is the author's responsibility to have prior permission if all or parts of earlier published illustrations are used in this paper.

Please mention proper reference and appropriate acknowledgements wherever expected.

If all or parts of previously published illustrations are used, permission must be taken from the copyright holder concerned. It is the author's responsibility to take these in writing.

Approval for reproduction/modification of any information (including figures and tables) published elsewhere must be obtained by the authors/copyright holders before submission of the manuscript. Contributors (Authors) are responsible for any copyright fee involved.

3. SUBMISSION OF MANUSCRIPTS

Manuscripts should be uploaded via this online submission page. The online submission is most efficient method for submission of papers, as it enables rapid distribution of manuscripts and consequently speeds up the review procedure. It also enables authors to know the status of their own manuscripts by emailing us. Complete instructions for submitting a paper is available below.

Manuscript submission is a systematic procedure and little preparation is required beyond having all parts of your manuscript in a given format and a computer with an Internet connection and a Web browser. Full help and instructions are provided on-screen. As an author, you will be prompted for login and manuscript details as Field of Paper and then to upload your manuscript file(s) according to the instructions.

To avoid postal delays, all transaction is preferred by e-mail. A finished manuscript submission is confirmed by e-mail immediately and your paper enters the editorial process with no postal delays. When a conclusion is made about the publication of your paper by our Editorial Board, revisions can be submitted online with the same procedure, with an occasion to view and respond to all comments.

Complete support for both authors and co-author is provided.

4. MANUSCRIPT'S CATEGORY

Based on potential and nature, the manuscript can be categorized under the following heads:

Original research paper: Such papers are reports of high-level significant original research work.

Review papers: These are concise, significant but helpful and decisive topics for young researchers.

Research articles: These are handled with small investigation and applications

Research letters: The letters are small and concise comments on previously published matters.

5.STRUCTURE AND FORMAT OF MANUSCRIPT

The recommended size of original research paper is less than seven thousand words, review papers fewer than seven thousands words also.Preparation of research paper or how to write research paper, are major hurdle, while writing manuscript. The research articles and research letters should be fewer than three thousand words, the structure original research paper; sometime review paper should be as follows:

Papers: These are reports of significant research (typically less than 7000 words equivalent, including tables, figures, references), and comprise:

(a)Title should be relevant and commensurate with the theme of the paper.

(b) A brief Summary, "Abstract" (less than 150 words) containing the major results and conclusions.

(c) Up to ten keywords, that precisely identifies the paper's subject, purpose, and focus.

(d) An Introduction, giving necessary background excluding subheadings; objectives must be clearly declared.

(e) Resources and techniques with sufficient complete experimental details (wherever possible by reference) to permit repetition; sources of information must be given and numerical methods must be specified by reference, unless non-standard.

(f) Results should be presented concisely, by well-designed tables and/or figures; the same data may not be used in both; suitable statistical data should be given. All data must be obtained with attention to numerical detail in the planning stage. As reproduced design has been recognized to be important to experiments for a considerable time, the Editor has decided that any paper that appears not to have adequate numerical treatments of the data will be returned un-refereed;

(g) Discussion should cover the implications and consequences, not just recapitulating the results; conclusions should be summarizing.

(h) Brief Acknowledgements.

(i) References in the proper form.

Authors should very cautiously consider the preparation of papers to ensure that they communicate efficiently. Papers are much more likely to be accepted, if they are cautiously designed and laid out, contain few or no errors, are summarizing, and be conventional to the approach and instructions. They will in addition, be published with much less delays than those that require much technical and editorial correction.

The Editorial Board reserves the right to make literary corrections and to make suggestions to improve briefness.

It is vital, that authors take care in submitting a manuscript that is written in simple language and adheres to published guidelines.

Format

Language: The language of publication is UK English. Authors, for whom English is a second language, must have their manuscript efficiently edited by an English-speaking person before submission to make sure that, the English is of high excellence. It is preferable, that manuscripts should be professionally edited.

Standard Usage, Abbreviations, and Units: Spelling and hyphenation should be conventional to The Concise Oxford English Dictionary. Statistics and measurements should at all times be given in figures, e.g. 16 min, except for when the number begins a sentence. When the number does not refer to a unit of measurement it should be spelt in full unless, it is 160 or greater.

Abbreviations supposed to be used carefully. The abbreviated name or expression is supposed to be cited in full at first usage, followed by the conventional abbreviation in parentheses.

Metric SI units are supposed to generally be used excluding where they conflict with current practice or are confusing. For illustration, 1.4 l rather than 1.4 × 10-3 m3, or 4 mm somewhat than 4 × 10-3 m. Chemical formula and solutions must identify the form used, e.g. anhydrous or hydrated, and the concentration must be in clearly defined units. Common species names should be followed by underlines at the first mention. For following use the generic name should be constricted to a single letter, if it is clear.

Structure

All manuscripts submitted to Global Journals Inc. (US), ought to include:

Title: The title page must carry an instructive title that reflects the content, a running title (less than 45 characters together with spaces), names of the authors and co-authors, and the place(s) wherever the work was carried out. The full postal address in addition with the e-mail address of related author must be given. Up to eleven keywords or very brief phrases have to be given to help data retrieval, mining and indexing.

Abstract, used in Original Papers and Reviews:

Optimizing Abstract for Search Engines

Many researchers searching for information online will use search engines such as Google, Yahoo or similar. By optimizing your paper for search engines, you will amplify the chance of someone finding it. This in turn will make it more likely to be viewed and/or cited in a further work. Global Journals Inc. (US) have compiled these guidelines to facilitate you to maximize the web-friendliness of the most public part of your paper.

Key Words

A major linchpin in research work for the writing research paper is the keyword search, which one will employ to find both library and Internet resources.

One must be persistent and creative in using keywords. An effective keyword search requires a strategy and planning a list of possible keywords and phrases to try.

Search engines for most searches, use Boolean searching, which is somewhat different from Internet searches. The Boolean search uses "operators," words (and, or, not, and near) that enable you to expand or narrow your affords. Tips for research paper while preparing research paper are very helpful guideline of research paper.

Choice of key words is first tool of tips to write research paper. Research paper writing is an art.A few tips for deciding as strategically as possible about keyword search:

- One should start brainstorming lists of possible keywords before even begin searching. Think about the most important concepts related to research work. Ask, "What words would a source have to include to be truly valuable in research paper?" Then consider synonyms for the important words.
- It may take the discovery of only one relevant paper to let steer in the right keyword direction because in most databases, the keywords under which a research paper is abstracted are listed with the paper.
- One should avoid outdated words.

Keywords are the key that opens a door to research work sources. Keyword searching is an art in which researcher's skills are bound to improve with experience and time.

Numerical Methods: Numerical methods used should be clear and, where appropriate, supported by references.

Acknowledgements: Please make these as concise as possible.

References

References follow the Harvard scheme of referencing. References in the text should cite the authors' names followed by the time of their publication, unless there are three or more authors when simply the first author's name is quoted followed by et al. unpublished work has to only be cited where necessary, and only in the text. Copies of references in press in other journals have to be supplied with submitted typescripts. It is necessary that all citations and references be carefully checked before submission, as mistakes or omissions will cause delays.

References to information on the World Wide Web can be given, but only if the information is available without charge to readers on an official site. Wikipedia and Similar websites are not allowed where anyone can change the information. Authors will be asked to make available electronic copies of the cited information for inclusion on the Global Journals Inc. (US) homepage at the judgment of the Editorial Board.

The Editorial Board and Global Journals Inc. (US) recommend that, citation of online-published papers and other material should be done via a DOI (digital object identifier). If an author cites anything, which does not have a DOI, they run the risk of the cited material not being noticeable.

The Editorial Board and Global Journals Inc. (US) recommend the use of a tool such as Reference Manager for reference management and formatting.

Tables, Figures and Figure Legends

Tables: Tables should be few in number, cautiously designed, uncrowned, and include only essential data. Each must have an Arabic number, e.g. Table 4, a self-explanatory caption and be on a separate sheet. Vertical lines should not be used.

Figures: Figures are supposed to be submitted as separate files. Always take in a citation in the text for each figure using Arabic numbers, e.g. Fig. 4. Artwork must be submitted online in electronic form by e-mailing them.

Preparation of Electronic Figures for Publication

Even though low quality images are sufficient for review purposes, print publication requires high quality images to prevent the final product being blurred or fuzzy. Submit (or e-mail) EPS (line art) or TIFF (halftone/photographs) files only. MS PowerPoint and Word Graphics are unsuitable for printed pictures. Do not use pixel-oriented software. Scans (TIFF only) should have a resolution of at least 350 dpi (halftone) or 700 to 1100 dpi (line drawings) in relation to the imitation size. Please give the data for figures in black and white or submit a Color Work Agreement Form. EPS files must be saved with fonts embedded (and with a TIFF preview, if possible).

For scanned images, the scanning resolution (at final image size) ought to be as follows to ensure good reproduction: line art: >650 dpi; halftones (including gel photographs) : >350 dpi; figures containing both halftone and line images: >650 dpi.

Color Charges: It is the rule of the Global Journals Inc. (US) for authors to pay the full cost for the reproduction of their color artwork. Hence, please note that, if there is color artwork in your manuscript when it is accepted for publication, we would require you to complete and return a color work agreement form before your paper can be published.

Figure Legends: Self-explanatory legends of all figures should be incorporated separately under the heading 'Legends to Figures'. In the full-text online edition of the journal, figure legends may possibly be truncated in abbreviated links to the full screen version. Therefore, the first 100 characters of any legend should notify the reader, about the key aspects of the figure.

6. AFTER ACCEPTANCE

Upon approval of a paper for publication, the manuscript will be forwarded to the dean, who is responsible for the publication of the Global Journals Inc. (US).

6.1 Proof Corrections

The corresponding author will receive an e-mail alert containing a link to a website or will be attached. A working e-mail address must therefore be provided for the related author.

Acrobat Reader will be required in order to read this file. This software can be downloaded

(Free of charge) from the following website:

www.adobe.com/products/acrobat/readstep2.html. This will facilitate the file to be opened, read on screen, and printed out in order for any corrections to be added. Further instructions will be sent with the proof.

Proofs must be returned to the dean at dean@globaljournals.org within three days of receipt.

As changes to proofs are costly, we inquire that you only correct typesetting errors. All illustrations are retained by the publisher. Please note that the authors are responsible for all statements made in their work, including changes made by the copy editor.

6.2 Early View of Global Journals Inc. (US) (Publication Prior to Print)

The Global Journals Inc. (US) are enclosed by our publishing's Early View service. Early View articles are complete full-text articles sent in advance of their publication. Early View articles are absolute and final. They have been completely reviewed, revised and edited for publication, and the authors' final corrections have been incorporated. Because they are in final form, no changes can be made after sending them. The nature of Early View articles means that they do not yet have volume, issue or page numbers, so Early View articles cannot be cited in the conventional way.

6.3 Author Services

Online production tracking is available for your article through Author Services. Author Services enables authors to track their article - once it has been accepted - through the production process to publication online and in print. Authors can check the status of their articles online and choose to receive automated e-mails at key stages of production. The authors will receive an e-mail with a unique link that enables them to register and have their article automatically added to the system. Please ensure that a complete e-mail address is provided when submitting the manuscript.

6.4 Author Material Archive Policy

Please note that if not specifically requested, publisher will dispose off hardcopy & electronic information submitted, after the two months of publication. If you require the return of any information submitted, please inform the Editorial Board or dean as soon as possible.

6.5 Offprint and Extra Copies

A PDF offprint of the online-published article will be provided free of charge to the related author, and may be distributed according to the Publisher's terms and conditions. Additional paper offprint may be ordered by emailing us at: editor@globaljournals.org .

Before start writing a good quality Computer Science Research Paper, let us first understand what is Computer Science Research Paper? So, Computer Science Research Paper is the paper which is written by professionals or scientists who are associated to Computer Science and Information Technology, or doing research study in these areas. If you are novel to this field then you can consult about this field from your supervisor or guide.

TECHNIQUES FOR WRITING A GOOD QUALITY RESEARCH PAPER:

1. Choosing the topic: In most cases, the topic is searched by the interest of author but it can be also suggested by the guides. You can have several topics and then you can judge that in which topic or subject you are finding yourself most comfortable. This can be done by asking several questions to yourself, like Will I be able to carry our search in this area? Will I find all necessary recourses to accomplish the search? Will I be able to find all information in this field area? If the answer of these types of questions will be "Yes" then you can choose that topic. In most of the cases, you may have to conduct the surveys and have to visit several places because this field is related to Computer Science and Information Technology. Also, you may have to do a lot of work to find all rise and falls regarding the various data of that subject. Sometimes, detailed information plays a vital role, instead of short information.

2. Evaluators are human: First thing to remember that evaluators are also human being. They are not only meant for rejecting a paper. They are here to evaluate your paper. So, present your Best.

3. Think Like Evaluators: If you are in a confusion or getting demotivated that your paper will be accepted by evaluators or not, then think and try to evaluate your paper like an Evaluator. Try to understand that what an evaluator wants in your research paper and automatically you will have your answer.

4. Make blueprints of paper: The outline is the plan or framework that will help you to arrange your thoughts. It will make your paper logical. But remember that all points of your outline must be related to the topic you have chosen.

5. Ask your Guides: If you are having any difficulty in your research, then do not hesitate to share your difficulty to your guide (if you have any). They will surely help you out and resolve your doubts. If you can't clarify what exactly you require for your work then ask the supervisor to help you with the alternative. He might also provide you the list of essential readings.

6. Use of computer is recommended: As you are doing research in the field of Computer Science, then this point is quite obvious.

7. Use right software: Always use good quality software packages. If you are not capable to judge good software then you can lose quality of your paper unknowingly. There are various software programs available to help you, which you can get through Internet.

8. Use the Internet for help: An excellent start for your paper can be by using the Google. It is an excellent search engine, where you can have your doubts resolved. You may also read some answers for the frequent question how to write my research paper or find model research paper. From the internet library you can download books. If you have all required books make important reading selecting and analyzing the specified information. Then put together research paper sketch out.

9. Use and get big pictures: Always use encyclopedias, Wikipedia to get pictures so that you can go into the depth.

10. Bookmarks are useful: When you read any book or magazine, you generally use bookmarks, right! It is a good habit, which helps to not to lose your continuity. You should always use bookmarks while searching on Internet also, which will make your search easier.

11. Revise what you wrote: When you write anything, always read it, summarize it and then finalize it.

12. Make all efforts: Make all efforts to mention what you are going to write in your paper. That means always have a good start. Try to mention everything in introduction, that what is the need of a particular research paper. Polish your work by good skill of writing and always give an evaluator, what he wants.

13. Have backups: When you are going to do any important thing like making research paper, you should always have backup copies of it either in your computer or in paper. This will help you to not to lose any of your important.

14. Produce good diagrams of your own: Always try to include good charts or diagrams in your paper to improve quality. Using several and unnecessary diagrams will degrade the quality of your paper by creating "hotchpotch." So always, try to make and include those diagrams, which are made by your own to improve readability and understandability of your paper.

15. Use of direct quotes: When you do research relevant to literature, history or current affairs then use of quotes become essential but if study is relevant to science then use of quotes is not preferable.

16. Use proper verb tense: Use proper verb tenses in your paper. Use past tense, to present those events that happened. Use present tense to indicate events that are going on. Use future tense to indicate future happening events. Use of improper and wrong tenses will confuse the evaluator. Avoid the sentences that are incomplete.

17. Never use online paper: If you are getting any paper on Internet, then never use it as your research paper because it might be possible that evaluator has already seen it or maybe it is outdated version.

18. Pick a good study spot: To do your research studies always try to pick a spot, which is quiet. Every spot is not for studies. Spot that suits you choose it and proceed further.

19. Know what you know: Always try to know, what you know by making objectives. Else, you will be confused and cannot achieve your target.

20. Use good quality grammar: Always use a good quality grammar and use words that will throw positive impact on evaluator. Use of good quality grammar does not mean to use tough words, that for each word the evaluator has to go through dictionary. Do not start sentence with a conjunction. Do not fragment sentences. Eliminate one-word sentences. Ignore passive voice. Do not ever use a big word when a diminutive one would suffice. Verbs have to be in agreement with their subjects. Prepositions are not expressions to finish sentences with. It is incorrect to ever divide an infinitive. Avoid clichés like the disease. Also, always shun irritating alliteration. Use language that is simple and straight forward. put together a neat summary.

21. Arrangement of information: Each section of the main body should start with an opening sentence and there should be a changeover at the end of the section. Give only valid and powerful arguments to your topic. You may also maintain your arguments with records.

22. Never start in last minute: Always start at right time and give enough time to research work. Leaving everything to the last minute will degrade your paper and spoil your work.

23. Multitasking in research is not good: Doing several things at the same time proves bad habit in case of research activity. Research is an area, where everything has a particular time slot. Divide your research work in parts and do particular part in particular time slot.

24. Never copy others' work: Never copy others' work and give it your name because if evaluator has seen it anywhere you will be in trouble.

25. Take proper rest and food: No matter how many hours you spend for your research activity, if you are not taking care of your health then all your efforts will be in vain. For a quality research, study is must, and this can be done by taking proper rest and food.

26. Go for seminars: Attend seminars if the topic is relevant to your research area. Utilize all your resources.

27. Refresh your mind after intervals: Try to give rest to your mind by listening to soft music or by sleeping in intervals. This will also improve your memory.

28. Make colleagues: Always try to make colleagues. No matter how sharper or intelligent you are, if you make colleagues you can have several ideas, which will be helpful for your research.

29. Think technically: Always think technically. If anything happens, then search its reasons, its benefits, and demerits.

30. Think and then print: When you will go to print your paper, notice that tables are not be split, headings are not detached from their descriptions, and page sequence is maintained.

31. Adding unnecessary information: Do not add unnecessary information, like, I have used MS Excel to draw graph. Do not add irrelevant and inappropriate material. These all will create superfluous. Foreign terminology and phrases are not apropos. One should NEVER take a broad view. Analogy in script is like feathers on a snake. Not at all use a large word when a very small one would be sufficient. Use words properly, regardless of how others use them. Remove quotations. Puns are for kids, not grunt readers. Amplification is a billion times of inferior quality than sarcasm.

32. Never oversimplify everything: To add material in your research paper, never go for oversimplification. This will definitely irritate the evaluator. Be more or less specific. Also too, by no means, ever use rhythmic redundancies. Contractions aren't essential and shouldn't be there used. Comparisons are as terrible as clichés. Give up ampersands and abbreviations, and so on. Remove commas, that are, not necessary. Parenthetical words however should be together with this in commas. Understatement is all the time the complete best way to put onward earth-shaking thoughts. Give a detailed literary review.

33. Report concluded results: Use concluded results. From raw data, filter the results and then conclude your studies based on measurements and observations taken. Significant figures and appropriate number of decimal places should be used. Parenthetical remarks are prohibitive. Proofread carefully at final stage. In the end give outline to your arguments. Spot out perspectives of further study of this subject. Justify your conclusion by at the bottom of them with sufficient justifications and examples.

34. After conclusion: Once you have concluded your research, the next most important step is to present your findings. Presentation is extremely important as it is the definite medium though which your research is going to be in print to the rest of the crowd. Care should be taken to categorize your thoughts well and present them in a logical and neat manner. A good quality research paper format is essential because it serves to highlight your research paper and bring to light all necessary aspects in your research.

Informal Guidelines of Research Paper Writing

Key points to remember:

- Submit all work in its final form.
- Write your paper in the form, which is presented in the guidelines using the template.
- Please note the criterion for grading the final paper by peer-reviewers.

Final Points:

A purpose of organizing a research paper is to let people to interpret your effort selectively. The journal requires the following sections, submitted in the order listed, each section to start on a new page.

The introduction will be compiled from reference matter and will reflect the design processes or outline of basis that direct you to make study. As you will carry out the process of study, the method and process section will be constructed as like that. The result segment will show related statistics in nearly sequential order and will direct the reviewers next to the similar intellectual paths throughout the data that you took to carry out your study. The discussion section will provide understanding of the data and projections as to the implication of the results. The use of good quality references all through the paper will give the effort trustworthiness by representing an alertness of prior workings.

Writing a research paper is not an easy job no matter how trouble-free the actual research or concept. Practice, excellent preparation, and controlled record keeping are the only means to make straightforward the progression.

General style:

Specific editorial column necessities for compliance of a manuscript will always take over from directions in these general guidelines.

To make a paper clear

· Adhere to recommended page limits

Mistakes to evade

- Insertion a title at the foot of a page with the subsequent text on the next page
- Separating a table/chart or figure - impound each figure/table to a single page
- Submitting a manuscript with pages out of sequence

In every sections of your document

· Use standard writing style including articles ("a", "the," etc.)

· Keep on paying attention on the research topic of the paper

· Use paragraphs to split each significant point (excluding for the abstract)

· Align the primary line of each section

· Present your points in sound order

· Use present tense to report well accepted

· Use past tense to describe specific results

· Shun familiar wording, don't address the reviewer directly, and don't use slang, slang language, or superlatives

· Shun use of extra pictures - include only those figures essential to presenting results

Title Page:

Choose a revealing title. It should be short. It should not have non-standard acronyms or abbreviations. It should not exceed two printed lines. It should include the name(s) and address (es) of all authors.

Abstract:

The summary should be two hundred words or less. It should briefly and clearly explain the key findings reported in the manuscript--must have precise statistics. It should not have abnormal acronyms or abbreviations. It should be logical in itself. Shun citing references at this point.

An abstract is a brief distinct paragraph summary of finished work or work in development. In a minute or less a reviewer can be taught the foundation behind the study, common approach to the problem, relevant results, and significant conclusions or new questions.

Write your summary when your paper is completed because how can you write the summary of anything which is not yet written? Wealth of terminology is very essential in abstract. Yet, use comprehensive sentences and do not let go readability for briefness. You can maintain it succinct by phrasing sentences so that they provide more than lone rationale. The author can at this moment go straight to shortening the outcome. Sum up the study, with the subsequent elements in any summary. Try to maintain the initial two items to no more than one ruling each.

- Reason of the study - theory, overall issue, purpose
- Fundamental goal
- To the point depiction of the research
- Consequences, including definite statistics - if the consequences are quantitative in nature, account quantitative data; results of any numerical analysis should be reported
- Significant conclusions or questions that track from the research(es)

Approach:

- Single section, and succinct
- As a outline of job done, it is always written in past tense
- A conceptual should situate on its own, and not submit to any other part of the paper such as a form or table
- Center on shortening results - bound background information to a verdict or two, if completely necessary
- What you account in an conceptual must be regular with what you reported in the manuscript
- Exact spelling, clearness of sentences and phrases, and appropriate reporting of quantities (proper units, important statistics) are just as significant in an abstract as they are anywhere else

Introduction:

The **Introduction** should "introduce" the manuscript. The reviewer should be presented with sufficient background information to be capable to comprehend and calculate the purpose of your study without having to submit to other works. The basis for the study should be offered. Give most important references but shun difficult to make a comprehensive appraisal of the topic. In the introduction, describe the problem visibly. If the problem is not acknowledged in a logical, reasonable way, the reviewer will have no attention in your result. Speak in common terms about techniques used to explain the problem, if needed, but do not present any particulars about the protocols here. Following approach can create a valuable beginning:

- Explain the value (significance) of the study
- Shield the model - why did you employ this particular system or method? What is its compensation? You strength remark on its appropriateness from a abstract point of vision as well as point out sensible reasons for using it.
- Present a justification. Status your particular theory (es) or aim(s), and describe the logic that led you to choose them.
- Very for a short time explain the tentative propose and how it skilled the declared objectives.

Approach:

- Use past tense except for when referring to recognized facts. After all, the manuscript will be submitted after the entire job is done.
- Sort out your thoughts; manufacture one key point with every section. If you make the four points listed above, you will need a least of four paragraphs.

- Present surroundings information only as desirable in order hold up a situation. The reviewer does not desire to read the whole thing you know about a topic.
- Shape the theory/purpose specifically - do not take a broad view.
- As always, give awareness to spelling, simplicity and correctness of sentences and phrases.

Procedures (Methods and Materials):

This part is supposed to be the easiest to carve if you have good skills. A sound written Procedures segment allows a capable scientist to replacement your results. Present precise information about your supplies. The suppliers and clarity of reagents can be helpful bits of information. Present methods in sequential order but linked methodologies can be grouped as a segment. Be concise when relating the protocols. Attempt for the least amount of information that would permit another capable scientist to spare your outcome but be cautious that vital information is integrated. The use of subheadings is suggested and ought to be synchronized with the results section. When a technique is used that has been well described in another object, mention the specific item describing a way but draw the basic principle while stating the situation. The purpose is to text all particular resources and broad procedures, so that another person may use some or all of the methods in one more study or referee the scientific value of your work. It is not to be a step by step report of the whole thing you did, nor is a methods section a set of orders.

Materials:

- Explain materials individually only if the study is so complex that it saves liberty this way.
- Embrace particular materials, and any tools or provisions that are not frequently found in laboratories.
- Do not take in frequently found.
- If use of a definite type of tools.
- Materials may be reported in a part section or else they may be recognized along with your measures.

Methods:

- Report the method (not particulars of each process that engaged the same methodology)
- Describe the method entirely
- To be succinct, present methods under headings dedicated to specific dealings or groups of measures
- Simplify - details how procedures were completed not how they were exclusively performed on a particular day.
- If well known procedures were used, account the procedure by name, possibly with reference, and that's all.

Approach:

- It is embarrassed or not possible to use vigorous voice when documenting methods with no using first person, which would focus the reviewer's interest on the researcher rather than the job. As a result when script up the methods most authors use third person passive voice.
- Use standard style in this and in every other part of the paper - avoid familiar lists, and use full sentences.

What to keep away from

- Resources and methods are not a set of information.
- Skip all descriptive information and surroundings - save it for the argument.
- Leave out information that is immaterial to a third party.

Results:

The principle of a results segment is to present and demonstrate your conclusion. Create this part a entirely objective details of the outcome, and save all understanding for the discussion.

The page length of this segment is set by the sum and types of data to be reported. Carry on to be to the point, by means of statistics and tables, if suitable, to present consequences most efficiently.You must obviously differentiate material that would usually be incorporated in a study editorial from any unprocessed data or additional appendix matter that would not be available. In fact, such matter should not be submitted at all except requested by the instructor.

Content

- Sum up your conclusion in text and demonstrate them, if suitable, with figures and tables.
- In manuscript, explain each of your consequences, point the reader to remarks that are most appropriate.
- Present a background, such as by describing the question that was addressed by creation an exacting study.
- Explain results of control experiments and comprise remarks that are not accessible in a prescribed figure or table, if appropriate.
- Examine your data, then prepare the analyzed (transformed) data in the form of a figure (graph), table, or in manuscript form.

What to stay away from

- Do not discuss or infer your outcome, report surroundings information, or try to explain anything.
- Not at all, take in raw data or intermediate calculations in a research manuscript.
- Do not present the similar data more than once.
- Manuscript should complement any figures or tables, not duplicate the identical information.
- Never confuse figures with tables - there is a difference.

Approach

- As forever, use past tense when you submit to your results, and put the whole thing in a reasonable order.
- Put figures and tables, appropriately numbered, in order at the end of the report
- If you desire, you may place your figures and tables properly within the text of your results part.

Figures and tables

- If you put figures and tables at the end of the details, make certain that they are visibly distinguished from any attach appendix materials, such as raw facts
- Despite of position, each figure must be numbered one after the other and complete with subtitle
- In spite of position, each table must be titled, numbered one after the other and complete with heading
- All figure and table must be adequately complete that it could situate on its own, divide from text

Discussion:

The Discussion is expected the trickiest segment to write and describe. A lot of papers submitted for journal are discarded based on problems with the Discussion. There is no head of state for how long a argument should be. Position your understanding of the outcome visibly to lead the reviewer through your conclusions, and then finish the paper with a summing up of the implication of the study. The purpose here is to offer an understanding of your results and hold up for all of your conclusions, using facts from your research and generally accepted information, if suitable. The implication of result should be visibly described. Infer your data in the conversation in suitable depth. This means that when you clarify an observable fact you must explain mechanisms that may account for the observation. If your results vary from your prospect, make clear why that may have happened. If your results agree, then explain the theory that the proof supported. It is never suitable to just state that the data approved with prospect, and let it drop at that.

- Make a decision if each premise is supported, discarded, or if you cannot make a conclusion with assurance. Do not just dismiss a study or part of a study as "uncertain."
- Research papers are not acknowledged if the work is imperfect. Draw what conclusions you can based upon the results that you have, and take care of the study as a finished work
- You may propose future guidelines, such as how the experiment might be personalized to accomplish a new idea.
- Give details all of your remarks as much as possible, focus on mechanisms.
- Make a decision if the tentative design sufficiently addressed the theory, and whether or not it was correctly restricted.
- Try to present substitute explanations if sensible alternatives be present.
- One research will not counter an overall question, so maintain the large picture in mind, where do you go next? The best studies unlock new avenues of study. What questions remain?
- Recommendations for detailed papers will offer supplementary suggestions.

Approach:

- When you refer to information, differentiate data generated by your own studies from available information
- Submit to work done by specific persons (including you) in past tense.
- Submit to generally acknowledged facts and main beliefs in present tense.

The Administration Rules

Please carefully note down following rules and regulation before submitting your Research Paper to Global Journals Inc. (US):

Segment Draft and Final Research Paper: You have to strictly follow the template of research paper. If it is not done your paper may get rejected.

- The **major constraint** is that you must independently make all content, tables, graphs, and facts that are offered in the paper. You must write each part of the paper wholly on your own. The Peer-reviewers need to identify your own perceptive of the concepts in your own terms. NEVER extract straight from any foundation, and never rephrase someone else's analysis.

- Do not give permission to anyone else to "PROOFREAD" your manuscript.

- Methods to avoid Plagiarism is applied by us on every paper, if found guilty, you will be blacklisted by all of our collaborated research groups, your institution will be informed for this and strict legal actions will be taken immediately.)
- To guard yourself and others from possible illegal use please do not permit anyone right to use to your paper and files.

Criterion for Grading a Research Paper (Compilation) by Global Journals Inc. (US)

Please note that following table is only a Grading of "Paper Compilation" and not on "Performed/Stated Research" whose grading solely depends on Individual Assigned Peer Reviewer and Editorial Board Member. These can be available only on request and after decision of Paper. This report will be the property of Global Journals Inc. (US).

Topics	Grades		
	A-B	**C-D**	**E-F**
Abstract	Clear and concise with appropriate content, Correct format. 200 words or below	Unclear summary and no specific data, Incorrect form Above 200 words	No specific data with ambiguous information Above 250 words
Introduction	Containing all background details with clear goal and appropriate details, flow specification, no grammar and spelling mistake, well organized sentence and paragraph, reference cited	Unclear and confusing data, appropriate format, grammar and spelling errors with unorganized matter	Out of place depth and content, hazy format
Methods and Procedures	Clear and to the point with well arranged paragraph, precision and accuracy of facts and figures, well organized subheads	Difficult to comprehend with embarrassed text, too much explanation but completed	Incorrect and unorganized structure with hazy meaning
Result	Well organized, Clear and specific, Correct units with precision, correct data, well structuring of paragraph, no grammar and spelling mistake	Complete and embarrassed text, difficult to comprehend	Irregular format with wrong facts and figures
Discussion	Well organized, meaningful specification, sound conclusion, logical and concise explanation, highly structured paragraph reference cited	Wordy, unclear conclusion, spurious	Conclusion is not cited, unorganized, difficult to comprehend
References	Complete and correct format, well organized	Beside the point, Incomplete	Wrong format and structuring

Index

A

Antérieures · 1
Aphelion · 26

D

Diamagnetism · 44

F

Fermionic · 37, 41, 42, 51

G

Globules · 1, 3, 5, 15

L

Lorentz · 3, 18, 21

P

Perihelion · 26
Peut · 3

R

Recapitulating · 3

S

Seulement · 1, 3

U

Undulatory · 11

save our planet

Global Journal of Science Frontier Research

Visit us on the Web at www.GlobalJournals.org | www.JournalofScience.org
or email us at helpdesk@globaljournals.org

ISSN 9755896

© Global Journals