Online ISSN : 2249-4626
Print ISSN : 0975-5896
DOI : 10.17406/GJSFR

Global Journal

of Science Frontier Research: A

Physics and Space Science



Real-Particle Field Theory

Derivation of Newton's Laws

Highlights

Laser Challenge of China

Time Dilation and Special Relativity

Discovering Thoughts, Inventing Future

VOLUME 21 ISSUE 6 VERSION 1.0

© 2001-2021 by Global Journal of Science Frontier Research, USA

Volume 21 Issue 37 was originally issued as A6

Global Journal of Science Frontier Research: A
Physics & Space Science

Volume 21 Issue 37
Originally issued as A6

Global Journal of Science Frontier Research: A
Physics & Space Science

Volume 21 Issue 6 (Ver. 1.0)

Open Association of Research Society

© Global Journal of Science Frontier Research. 2021.

All rights reserved.

This is a special issue published in version 1.0 of "Global Journal of Science Frontier Research." By Global Journals Inc.

All articles are open access articles distributed under "Global Journal of Science Frontier Research"

Reading License, which permits restricted use. Entire contents are copyright by of "Global Journal of Science Frontier Research" unless otherwise noted on specific articles.

No part of this publication may be reproduced or transmitted in any form or by any means, electronic or mechanical, including photocopy, recording, or any information storage and retrieval system, without written permission.

The opinions and statements made in this book are those of the authors concerned. Ultraculture has not verified and neither confirms nor denies any of the foregoing and no warranty or fitness is implied.

Engage with the contents herein at your own risk.

The use of this journal, and the terms and conditions for our providing information, is governed by our Disclaimer, Terms and Conditions and Privacy Policy given on our website http://globaljournals.us/terms-and-condition/menu-id-1463/

By referring / using / reading / any type of association / referencing this journal, this signifies and you acknowledge that you have read them and that you accept and will be bound by the terms thereof.

All information, journals, this journal, activities undertaken, materials, services and our website, terms and conditions, privacy policy, and this journal is subject to change anytime without any prior notice.

Incorporation No.: 0423089
License No.: 42125/022010/1186
Registration No.: 430374
Import-Export Code: 1109007027
Employer Identification Number (EIN):
USA Tax ID: 98-0673427

Global Journals Inc.

*(A Delaware USA Incorporation with "Good Standing"; **Reg. Number: 0423089**)*
Sponsors: Open Association of Research Society
Open Scientific Standards

Publisher's Headquarters office

Global Journals® Headquarters
945th Concord Streets,
Framingham Massachusetts Pin: 01701,
United States of America
USA Toll Free: +001-888-839-7392
USA Toll Free Fax: +001-888-839-7392

Offset Typesetting

Global Journals Incorporated
2nd, Lansdowne, Lansdowne Rd., Croydon-Surrey,
Pin: CR9 2ER, United Kingdom

Packaging & Continental Dispatching

Global Journals Pvt Ltd
E-3130 Sudama Nagar, Near Gopur Square,
Indore, M.P., Pin:452009, India

Find a correspondence nodal officer near you

To find nodal officer of your country, please email us at *local@globaljournals.org*

eContacts

Press Inquiries: *press@globaljournals.org*
Investor Inquiries: *investors@globaljournals.org*
Technical Support: *technology@globaljournals.org*
Media & Releases: *media@globaljournals.org*

Pricing (Excluding Air Parcel Charges):

Yearly Subscription (Personal & Institutional)
250 USD (B/W) & 350 USD (Color)

Editorial Board

Global Journal of Science Frontier Research

Dr. John Korstad

Ph.D., M.S. at Michigan University, Professor of Biology, Department of Biology Oral Roberts University, United States

Dr. Alicia Esther Ares

Ph.D. in Science and Technology, University of General San Martin, Argentina State University of Misiones, United States

Dr. Sahraoui Chaieb

Ph.D. Physics and Chemical Physics, M.S. Theoretical Physics, B.S. Physics, cole Normale Suprieure, Paris, Associate Professor, Bioscience, King Abdullah University of Science and Technology United States

Tuncel M. Yegulalp

Professor of Mining, Emeritus, Earth & Environmental Engineering, Henry Krumb School of Mines, Columbia University Director, New York Mining and Mineral, Resources Research Institute, United States

Andreas Maletzky

Zoologist University of Salzburg, Department of Ecology and Evolution Hellbrunnerstraße Salzburg Austria, Universitat Salzburg, Austria

Dr. Gerard G. Dumancas

Postdoctoral Research Fellow, Arthritis and Clinical Immunology Research Program, Oklahoma Medical Research Foundation Oklahoma City, OK United States

Dr. Mazeyar Parvinzadeh Gashti

Ph.D., M.Sc., B.Sc. Science and Research Branch of Islamic Azad University, Tehran, Iran Department of Chemistry & Biochemistry, University of Bern, Bern, Switzerland

Dr. Indranil Sen Gupta

Ph.D., Mathematics, Texas A & M University, Department of Mathematics, North Dakota State University, North Dakota, United States

Dr. Richard B Coffin

Ph.D., in Chemical Oceanography, Department of Physical and Environmental, Texas A&M University United States

Dr. A. Heidari

Ph.D., D.Sc, Faculty of Chemistry, California South University (CSU), United States

Dr. Xianghong Qi

University of Tennessee, Oak Ridge National Laboratory, Center for Molecular Biophysics, Oak Ridge National Laboratory, Knoxville, TN 37922, United States

Dr. Vladimir Burtman

Research Scientist, The University of Utah, Geophysics Frederick Albert Sutton Building 115 S 1460 E Room 383, Salt Lake City, UT 84112, United States

Dr. Shyny Koshy

Ph.D. in Cell and Molecular Biology, Kent State University, United States

Dr. Gayle Calverley

Ph.D. in Applied Physics, University of Loughborough, United Kingdom

Dr. Bingyun Li

Ph.D. Fellow, IAES, Guest Researcher, NIOSH, CDC, Morgantown, WV Institute of Nano and Biotechnologies West Virginia University, United States

Dr. Baziotis Ioannis

Ph.D. in Petrology-Geochemistry-Mineralogy Lipson, Athens, Greece

Dr. Matheos Santamouris

Prof. Department of Physics, Ph.D., on Energy Physics, Physics Department, University of Patras, Greece

Dr. Vyacheslav Abramov

Ph.D in Mathematics, BA, M.Sc, Monash University, Australia

Dr. Fedor F. Mende

Ph.D. in Applied Physics, B. Verkin Institute for Low Temperature Physics and Engineering of the National Academy of Sciences of Ukraine

Dr. Moustafa Mohamed Saleh Abbassy

Ph.D., B.Sc, M.Sc in Pesticides Chemistry, Department of Environmental Studies, Institute of Graduate Studies & Research (IGSR), Alexandria University, Egypt

Dr. Yaping Ren

School of Statistics and Mathematics, Yunnan University of Finance and Economics, Kunming 650221, China

Dr. Yilun Shang

Ph.d in Applied Mathematics, Shanghai Jiao Tong University, China

Dr. T. David A. Forbes

Associate Professor and Range Nutritionist Ph.D. Edinburgh University - Animal Nutrition, M.S. Aberdeen University - Animal Nutrition B.A. University of Dublin-Zoology

Dr. Bing-Fang Hwang

Department of Occupational, Safety and Health, College of Public Health, China Medical University, Taiwan Ph.D., in Environmental and Occupational Epidemiology, Department of Epidemiology, Johns Hopkins University, USA Taiwan

Dr. Moaed Almeselmani

Ph.D in Plant Physiology, Molecular Biology, Biotechnology and Biochemistry, M. Sc. in Plant Physiology, Damascus University, Syria

Dr. Giuseppe A Provenzano

Irrigation and Water Management, Soil Science, Water Science Hydraulic Engineering , Dept. of Agricultural and Forest Sciences Universita di Palermo, Italy

Dr. Eman M. Gouda

Biochemistry Department, Faculty of Veterinary Medicine, Cairo University, Giza, Egypt

Dr. Claudio Cuevas

Department of Mathematics, Universidade Federal de Pernambuco, Recife PE, Brazil

Dr. Arshak Poghossian

Ph.D. Solid-State Physics, Leningrad Electrotechnical Institute, Russia Institute of Nano and Biotechnologies Aachen University of Applied Sciences, Germany

Dr. Qiang Wu

Ph.D. University of Technology, Sydney, Department of Mathematics, Physics and Electrical Engineering, Northumbria University

Dr. Lev V. Eppelbaum

Ph.D. Institute of Geophysics, Georgian Academy of Sciences, Tbilisi Assistant Professor Dept Geophys & Planetary Science, Tel Aviv University Israel

Prof. Jordi Sort

ICREA Researcher Professor, Faculty, School or Institute of Sciences, Ph.D., in Materials Science Autonomous, University of Barcelona Spain

Dr. Eugene A. Permyakov

Institute for Biological Instrumentation Russian Academy of Sciences, Director Pushchino State Institute of Natural Science, Department of Biomedical Engineering, Ph.D., in Biophysics Moscow Institute of Physics and Technology, Russia

Prof. Dr. Zhang Lifei

Dean, School of Earth and Space Sciences, Ph.D., Peking University, Beijing, China

Dr. Hai-Linh Tran

Ph.D. in Biological Engineering, Department of Biological Engineering, College of Engineering, Inha University, Incheon, Korea

Dr. Yap Yee Jiun

B.Sc.(Manchester), Ph.D.(Brunel), M.Inst.P.(UK) Institute of Mathematical Sciences, University of Malaya, Kuala Lumpur, Malaysia

Dr. Shengbing Deng

Departamento de Ingeniera Matemtica, Universidad de Chile. Facultad de Ciencias Fsicas y Matemticas. Blanco Encalada 2120, Piso 4., Chile

Dr. Linda Gao

Ph.D. in Analytical Chemistry, Texas Tech University, Lubbock, Associate Professor of Chemistry, University of Mary Hardin-Baylor, United States

Angelo Basile

Professor, Institute of Membrane Technology (ITM) Italian National Research Council (CNR) Italy

Dr. Bingsuo Zou

Ph.D. in Photochemistry and Photophysics of Condensed Matter, Department of Chemistry, Jilin University, Director of Micro- and Nano- technology Center, China

Dr. Bondage Devanand Dhondiram

Ph.D. No. 8, Alley 2, Lane 9, Hongdao station, Xizhi district, New Taipei city 221, Taiwan (ROC)

Dr. Latifa Oubedda

National School of Applied Sciences, University Ibn Zohr, Agadir, Morocco, Lotissement Elkhier N66, Bettana Sal Marocco

Dr. Lucian Baia

Ph.D. Julius-Maximilians, Associate professor, Department of Condensed Matter Physics and Advanced Technologies, Department of Condensed Matter Physics and Advanced Technologies, University Wrzburg, Germany

Dr. Maria Gullo

Ph.D., Food Science and Technology Department of Agricultural and Food Sciences, University of Modena and Reggio Emilia, Italy

Dr. Fabiana Barbi

B.Sc., M.Sc., Ph.D., Environment, and Society, State University of Campinas, Brazil Center for Environmental Studies and Research, State University of Campinas, Brazil

Dr. Yiping Li

Ph.D. in Molecular Genetics, Shanghai Institute of Biochemistry, The Academy of Sciences of China Senior Vice Director, UAB Center for Metabolic Bone Disease

Nora Fung-yee TAM

DPhil University of York, UK, Department of Biology and Chemistry, MPhil (Chinese University of Hong Kong)

Dr. Sarad Kumar Mishra

Ph.D in Biotechnology, M.Sc in Biotechnology, B.Sc in Botany, Zoology and Chemistry, Gorakhpur University, India

Dr. Ferit Gurbuz

Ph.D., M.SC, B.S. in Mathematics, Faculty of Education, Department of Mathematics Education, Hakkari 30000, Turkey

Prof. Ulrich A. Glasmacher

Institute of Earth Sciences, Director of the Steinbeis Transfer Center, TERRA-Explore, University Heidelberg, Germany

Prof. Philippe Dubois

Ph.D. in Sciences, Scientific director of NCC-L, Luxembourg, Full professor, University of Mons UMONS Belgium

Dr. Rafael Gutirrez Aguilar

Ph.D., M.Sc., B.Sc., Psychology (Physiological), National Autonomous, University of Mexico

Ashish Kumar Singh

Applied Science, Bharati Vidyapeeth's College of Engineering, New Delhi, India

Dr. Maria Kuman

Ph.D, Holistic Research Institute, Department of Physics and Space, United States

Contents of the Issue

i. Copyright Notice
ii. Editorial Board Members
iii. Chief Author and Dean
iv. Contents of the Issue

1. Content and Derivation of Newton's Laws. *1-10*
2. Laser Challenge of China. *11-14*
3. An Overview of Optical Fibers. *15-20*
4. Time Dilation and Special Relativity. *21-25*
5. Dark Matter and Real-Particle Field Theory. *27-39*
6. Investigating the Operational Parameters of a Centrifugal Pump used in Reverse Mode as Turbine for Electricity Generation. *41-49*

v. Fellows
vi. Auxiliary Memberships
vii. Preferred Author Guidelines
viii. Index

Global Journal of Science Frontier Research: a
Physics and Space Science
Volume 21 Issue 6 Version 1.0 Year 2021
Type: Double Blind Peer Reviewed International Research Journal
Publisher: Global Journals
Online ISSN: 2249-4626 & Print ISSN: 0975-5896

Content and Derivation of Newton's Law

By Khachatur Kirakosyan
Institute of Chemical Physics

Abstract- Taking into account the peculiarities of interaction, the equations of motion are proposed, from which correspondences with the main parameters of both kinematics and dynamics are found. It is shown that it is the potential of interaction with the third-party partners that is the parameter, the presence, change, and redistribution of which the content of all three Newton's laws is interpreted.

Keywords: *structure, mass, momentum, equivalence, dimension.*

GJSFR-A Classification: *FOR Code: 240599*



Strictly as per the compliance and regulations of:

© 2021. Khachatur Kirakosyan. This research/review article is distributed under the terms of the Attribution-NonCommercial-NoDerivatives 4.0 International (CC BY-NC-ND 4.0). You must give appropriate credit to authors and reference this article if parts of the article are reproduced in any manner. Applicable licensing terms are at https://creativecommons.org/ licenses/by-nc-nd/4.0/.

Content and Derivation of Newton's Laws

Khachatur Kirakosyan

Abstract- **Taking into account the peculiarities of interaction, the equations of motion are proposed, from which correspondences with the main parameters of both kinematics and dynamics are found. It is shown that it is the potential of interaction with the third-party partners that is the parameter, the presence, change, and redistribution of which the content of all three Newton's laws is interpreted.**

Keywords: structure, mass, momentum, equivalence, dimension.

I. Introduction

Even though humanity has existed for hundreds of thousands of years, the beginning of the formation of conceptual scientific disciplines and the rapid penetration of scientific achievements into everyday life is largely associated with the emergence of Newton's work "The Mathematical Principles of Natural Philosophy" [1], with the discovery of the fundamental property "mass" in the modern sense. Subsequently, mass and related concepts (momentum, force, energy, et cetera) and laws became instruments for quantitative research not only in mechanics and physics in general but also in many other areas of natural science. Newton's laws are axioms, taken on faith, and always fulfilled in practice. Newton's first law states that if a body is at rest or moving at a constant speed in a straight line, it will remain at rest or keep moving in a straight line at constant speed unless it is acted upon by a force. The second law states that the acceleration of an object is dependent upon two variables – the net force acting upon the object and the mass of the object. The acceleration of an object depends directly upon the net force acting upon the object, and inversely upon the mass of the object.

$$\vec{a} = \frac{\vec{F}}{m} \qquad (1)$$

Newton's Third Law. A force is a push or a pull that acts upon an object as a result of its interaction with another object. Formally stated, Newton's third law is: For every action, there is an equal and opposite reaction.

In modern formulations, Newton's laws were corrected by the introduction of the concept of a material point with infinitely small dimensions, the choice of inertial reference frames. In addition, based on the results of the special theory of relativity, a conclusion is made: the laws of mechanics are applicable for speeds that are significantly lower than the speed of light in a vacuum. Despite its colossal significance, the fundamental property of matter - the "mass" and related concepts and laws contain uncertainties[2-6].Analyzing the evolution of the concept of 'mass', the author of [2] concluded:' ... a modern physicist should be aware that the foundation of his impressive knowledge, the basic concepts of his science, such as the concept of mass, are shrouded in serious uncertainties that have not yet been determined ". Jammer's opinion was discussed in later publications [5,6].

In this work, based on the equations of motion of an approach called Structural Theory (ST) [7-10], the structural content of the basic concepts of mechanics is considered, taking into account the class of interactions in which physical bodies are involved, Newton's laws of motion are derived, it is shown that the momentum, or its change, a force, do not depend on the individual characteristics of the bodies under consideration.

In ST it is assumed that starting from a certain hierarchical level, all bodies have the same structural element, the laws of motion of which determine the laws of motion of physical bodies as a whole. Hence, the task of identifying the patterns of motion of physical bodies is reduced to modeling the above structural element and determining its motion.

Particles in ST are modeled in the following hierarchical sequence: a hypothesis is put forward about the existence of some particles of the conventionally smallest hierarchical level:ε-particles. From ε -particles, the Δ-particles, from pairs Δ-particles and three Δ-pairs the γ-particles for various purposes are modulated, which are the basis of known elementary particles: electrons (e^-), positrons (e^+), muons, pions, proton (p^+), antiproton (p^+), including γ_{0i} -particles, the regularities of motion of which determine the regularities of motion of physical bodies. The main attribute of ε -particles is their ability to interact in pairs. An elementary act of interaction between ε -particles (ε -act) occurs with a strictly defined duration at a strictly defined distance, while, as a result of the interaction, ε -particles move strictly at the same distance. Specific directions of displacement are determined by the type of interacting particlesю Three types of Δ-elements Δ_i, Δ_j, and Δ_k are modeled from ε -particles, which oscillate in three mutually perpendicular directions, the indices at the -symbols indicate the directions of the corresponding unit vectors: $\vec{e}_i, \vec{e}_j,$ and $\vec{e}_k$ Compositions and rules of interactions between ε -particles and Δ -elements are selected in such a way that Δ_i, Δ_j, and are always

Author: Institute of Chemical Physics, National Academy of Sciences, Yerevan, Armenia. e-mail: khkirakosyan@gmail.com

© 2021 Global Journals

mutually recognizable. The γ_{0i}-particles are characterized by the general Δ-composition $2\Delta_i 2\Delta_j 2\Delta_k$ or, simply 2i2j2k, where only their indices are used to designate the type of Δ-elements.

The trajectory of motion of the reduced composition of γ_{0i} -particles are formed by the addition of oscillations in three mutually perpendicular directions, which are further considered as the coordinate axes [9].

Because both the smallest path and time intervals are associated with the same ε-act, by counting ε-acts, we will determine both the path and time of motion and if the final path is determined by adding the displacements in three mutually perpendicular directions, time is determined by the number of successively implemented ε-acts in all directions of motion. Thus, γ_{0i}-particles are used both as coordinate systems and as a single tool for determining the path and time, that is the γ_{0i}-particle itself is used as a frame of reference.

For a dimensional description of space and time, the following dimensions are assigned to a strictly constant interval of the ε-act: ξ_d cm for path and ξ_t sec for time. Due to the constancy of the ε-interval, ξ_d and ξ_t are also constants. Multiplying the number of ε-intervals by ξ_d and ξ_t, we obtain the dimensional values of the path and time, in connection with which ξ_d and ξ_t are called the coefficients of the dimensions of the path and time. In addition to the direction, the Δ-particles are characterized by the amplitude of the oscillation H_Δ, the Δ-pair α_0, and multiple repetitions of the amplitude $H_c = H_\Delta^2$, that is, characterized by

$$H_{oe} = \alpha_o H_\Delta^2 = \alpha_o H_c \tag{2}$$

ε-acts, where

$$\alpha_0 = \sum_{n=1}^{7} \sum_{l=0}^{n-1} (2l+1) = 140 \tag{3}$$

n and l play the role of the principal and azimuthal quantum numbers for the considered hierarchical level [9]. Taking into account the geometric features of the formation of the trajectory of γ_{0i}-numbers [8,9], equation (2) is transformed into

$$H_0 = \frac{\alpha_o H_c}{\chi_c} \tag{4}$$

where indicated

$$\alpha_c = \frac{\alpha_0}{\chi_c} \tag{5}$$

It should be noted that the introduction of constant χ_c is associated with the transition from actually formed spatial trajectories of motion to simplified linear trajectories [10].

The trajectories of motion of γ_{0i}-particles, because of their Δ-composition, always represent a three-dimensional figure, the volume of which is called a trajectorial. Thus, the trajectory formed by the addition of three mutually perpendicular oscillations is a torus, the volume of which is calculated using integrals related by an equation formally resembling the equation Stokes

$$\oint_L Sdl = \oint_{S_j} curlSdS_j \tag{6}$$

The left side of the above equation is the volume of the torus is calculated by the circulation of the oriented surface S (axial vector) along a curvilinear closed path L, with the help of the right side the same volume is calculated as the result of the mixed product of three vectors, one of which is $curlS$.

The integration of equation (6) is carried out taking into account the class of interactions in which the γ_{0i}-particles participate. In addition to the gravitational one, the ST considers the following types of interactions:

– with the participation of only its constituent particles;
– with the participation of the constituent particles of their own and their partner;
– with the participation of component particles of third-party partners.

Sequential participation of γ_{0i}-particles in all types of interactions is allowed. Taking into account the interaction class from equation (6), after some simplifications, the following equations of motion are derived [9]:

$$\alpha_c 2\pi r_c \left[\alpha_c^2 H_c^2\right] = \alpha_c H_c \left[\pi H_0^2\right] \xi_d \tag{7}$$

$$\alpha_c 2\pi r \left[H_i^2\right] = \alpha_c H_c \left[\pi H_o^2\right] \xi_d \tag{8}$$

$$\lambda[H_i^2] = H_i \left[\pi H_0^2\right] \xi_d \tag{9}$$

$$\left(\alpha_c 2\pi r + \lambda\right)\left[H_i^2\right] = \left(H_0 + H_i\right)\left[\pi H_0^2\right] \xi_d \tag{10}$$

In equation (7), the subscript "c" at r and H indicates the constancy of the intrinsic interaction: $r_c = H_c \xi_d / 2, S_j = \pi H_0^2, L_c = \alpha_o 2\pi r_c$. The oriented surfaces S and S_j are taken in square brackets. The trajectory of the intrinsic interaction is a torus with equal radii. In interactions with its partner, only the constituent particles of interaction partners participate. This class includes

© 2021 Global Journals

electrostatic and gravitational interactions, while in certain cases planetary trajectories are formed. When interactions at a distance, a certain number of ε-acts is spent on removing particles - carriers of interaction, from their bases, in this connection, the amplitude of oscillation of the leading Δ-pairs of γ_{0i}-particles H_i is less than H_c. The motion of γ_{0i}-particles in the case of interaction with their partner is described by equation (8), where the circulation path $L = \alpha_c 2\pi r, S = [H_i^2]$, r is a larger circulation radius. The oscillation amplitudes H_c, H_i, and also the value $H_0 = \alpha_c H_c$ is called interaction potentials. Any variants of interactions with the participation of third-party partners are reduced to the introduction into the system under consideration of a coupled pair of γ_{0i}-particles called β_ε-pairs and born as a result of chemical, nuclear, thermal, and many other processes [7-10]. β_ε-pairs can be introduced into the systems under consideration by supplying heat, radiation, mechanical shock, etc. Depending on the mechanism of interaction of b-pairs with particles of the medium, there is a change in thermal, electrical, and other properties of physical bodies, including their movement as an integral unit [7,8]. In this work, we will consider those cases when from the outside introduced β_ε-pairs cause the motion of physical bodies as integral units. In the free state of the β_ε-pair, it is photons that are in a state of constant motion in a given direction in space. The motion of β_ε-pairs, both in the free and in the bound state, is described by equation (9), where H_i is the interaction potential, λ is the minimum transverse path of manifestation of the integrity of the γ_{0i}-particle.

Two photons with the opposite directions of motion and Δ-composition are formed during the annihilation of slow $e^- e^+$-pairs.

$$f_k = \frac{2j2\bar{i}\,2k}{2\bar{j}2i2k} \text{ and } f_{\bar{k}} = \frac{2\bar{j}2\bar{i}\,2\bar{k}}{2j2i2\bar{k}} \qquad (11)$$

where f is the symbol of photons, indexes k and $\bar{k}$ at f indicate the direction of motion, the dashes above the symbols of the Δ-elements indicate that the particles are moving in the opposite direction.

Photons with orts of motion y e_j and $\bar{e}_j$ are represented by Δ-compositions

$$f_j = \frac{2j2\bar{i}\,2k}{2j2i2\bar{k}},\ f_{\bar{j}} = \frac{2\bar{j}2\bar{i}\,2\bar{k}}{2\bar{j}2i2k} \qquad (12)$$

Note that the directions of motion of photons and β_ε-pairs are determined by the directions of motion of leading Δ-pairs: $2k/2k$ for f_k, $2\bar{k}/2\bar{k}$ for $f_{\bar{k}}$, $2j/2j$ and $2\bar{j}/2\bar{j}$ for f_j and $f_{\bar{j}}$, respectively. It is convenient to represent the union of γ_{0i}-pairs in photons and β_ε-pairs in complexes by the formula j_{ef}/j_{pf}, where the numerator shows the Δ-pairs of the world e^- with a $2\bar{i}$-pair, in the denominator of the Δ-pairs of the world e^+ with $2i$ pairs. The specificity of the bound state between γ_{ef} and γ_{pf} is such that periodically, upon reaching the phase π, there is an exchange of $2j$- and $2k$-pairs between the worlds e^- and e^+, while the Δ-pairs that have exchanged these pares, change the direction of their motion. Because the Δ-pairs perform an oscillatory motion, their direction of motion is reversed also when the phase π is reached. Hence, due to the simultaneous double change in the direction of movement of the leading Δ-pairs, their final direction of motion remains unchanged. Hence, the parametric equation describing the motion of the leading Δ-pair becomes linear. The β_ε-pairs introduced into the composition of various physical bodies are characterized by a similar system of parametric equations.

Thus, the motion of the photon, as well as the β_ε-pairs, are characterized by two periodic and one linear parametric equations, in relation with which the photon is in constant motion in the direction of the leading Δ-pairs.

As a rule, the γ_{0i}-particles of physical bodies with rest mass in a state of interaction are characterized by compositions of the type $2j2\bar{i}\,2\bar{k}/2\bar{j}2i2k$ or $2j\bar{2}i2k/2\bar{j}\,2i2\bar{k}$, that is the Δ-pairs in the numerator and denominator have opposite directions [7,8]. It is easy to verify that the reduced γ_{0i}-pairs, exchanging with γ_{0i}-particles of β_ε-pairs, with compositions similar to photons (11, 12), are transformed into β_ε-pairs with Δ-pairs of the same direction of motion. As a result of the periodic exchange of γ_{0i}-particles, the entire complex passes into a state of periodic motion in the direction of the leading Δ-pairs.

The β_ε-pairs, both in the free and in the bound state, are characterized by the potential H_i, respectively, and the equation of motion above the considered complex is represented by equation (10).

From the equations of motion of the ST (6) – (10), it follows that the final trajectory of motion of γ_{0i}-particles are formed by two components: transverse, always with a closed curvilinear trajectory with the weaving perpendicular to the surface of $\left[H_i^2\right]$ and longitudinal with the weaving of the perpendicular surface of $\left[\pi H_0^2\right]$. Now, let us reveal the

© 2021 Global Journals

correspondence between the given characteristics of the ST motion and the generally accepted kinematic and dynamic characteristics of physical bodies. In kinematics, a material point with infinitely small dimensions is considered as a physical body, its velocity v is defined as $v = \lim_{\Delta t \to 0} \frac{\Delta l}{\Delta t}$, that is, the ratio of an infinitely small path interval to a time interval tending to zero. Thus, three uncertainties are put forward, associated with infinitely small intervals of the path, time, and sizes of the investigated bodies. Formally, the use of such small values means penetration into the microcosm, while the absence of clear limits of space and time gives rise to new uncertainties regarding the hierarchical level of the world under consideration.

According to the foregoing, the laws of motion of physical bodies are determined by the laws of motion of γ_{0i}-particles, hence, γ_{0i}-particles are promoted to the role of the specified material point. In this case, we do not reduce the dimensions of the physical body to infinitesimal values but penetrate deep into the structure of matter to such a hierarchical level, with which the mechanism of motion of physical bodies is associated. Because we choose the γ_{0i}-particle as the smallest organization associated with the mechanism of motion, the essence of the periodic process of restructuring the organization under consideration in a given direction [9], then it is quite natural to use the duration and the distance traveled during this period as the characteristic smallest kinematic intervals associated with the manifestation of γ_{0i}- particles as integral units. In equations (6), (8), (9), and (10), the main variable is the potential H_i, therefore, the manifestation of the integrity of γ_{0i}-particles are associated with the intervals of longitudinal and corresponding transverse paths

$$l_o = H_o\xi_d, l_i = H_i\xi_d, l_{0i} = (H_o + H_i)\xi_d \quad (13)$$

$$\lambda_0 = \frac{\pi H_0^2 \xi_d}{H_0}, \lambda = \frac{\pi H_0^2 \xi_d}{H_i}, \lambda_{0i} = \frac{(H_0+H_i)\pi H_o^2 \xi_d}{H_i^2} \quad (14)$$

The given longitudinal and transverse paths are overcome in the same time intervals:

$$t_i = H_i\pi H_0^2\xi_t, t_0 = H_0\pi H_0^2\xi_t, t_{0i} = (H_0 + H_i)\pi H_0^2\xi_t \quad (15)$$

where it is taken into account that the longitudinal motion is realized by weaving a perpendicular surface πH_0^2, that is, a certain amount ε-acts is also spent on weaving this surface.

Introducing a new dimension factor for time

$$\pi H_0^2 \xi_t = \xi_\tau \quad (16)$$

the time intervals for the manifestation of integrity (15) are represented by the series

$$\tau_i = H_i\xi_\tau, \tau_0 = H_0\xi_\tau, \tau_{oi} = \left(H_0 + H_i\right)\xi_\tau \quad (17)$$

By the ratio of the reduced minimum intervals of the longitudinal path (13) and the corresponding times (17), we obtain the velocities

$$c = \frac{H_0\xi_d}{H_0\xi_\tau}, c = \frac{H_i\xi_d}{H_i\xi_\tau}, v = \frac{H_i\xi_d}{(H_0+H_i)\xi_\tau} = \frac{H_i c}{H_0+H_i}, \quad (18)$$

where indicated

$$c = \frac{\xi_d}{\xi_\tau} \quad (19)$$

and when determining v, it was taken into account that the final path with its own interaction is zero.

In [8, 9] it was shown that the quantity c (19) is numerically equal to the speed of light in a vacuum. From the first two formulas of the series (18) it follows that we have the symmetric flow of path and time, while, in the case of its interaction, for each time interval $H_0\xi_\tau$, the particle is in the same place in space, as if being at rest. Hence, those bases involved only in their interaction will be called γ_o-particles. From the third formula of the series (18), it follows that the maximum speed of longitudinal motion $H_i \to H_0$ tends to the speed of photons c (19). From series (14) and (17) it follows that the speed of the transverse motion of photons and complexes of b β_ε-pairs with γ_{0i}-particles exceeds the speed of light.

Within the framework of classical mechanics, as a rule, longitudinal motion is considered, and, as a rule, for $H_i \to H_0$, thus, based on the third formula of the series (18), the velocity of γ_{0i}-particles

$$v = \frac{H_i}{H_0}c \quad (20)$$

We represent the equations of motion (7-10) in the form

$$\frac{H_0^2}{H_0\pi H_0^2} = \frac{\xi_d}{\alpha_c 2\pi r_c}; \frac{H_i^2}{H_0\pi H_0^2} = \frac{\xi_d}{\alpha_c 2\pi r}; \frac{H_i^2}{\pi H_0^2} = \frac{\xi_d}{\lambda}; \frac{H_i^2}{(H_0+H_i)\pi H_0^2} = \frac{\xi_d}{L} \quad (21)$$

© 2021 Global Journals

where are designated

$$\lambda = \frac{\pi H_0^2 \xi_d}{H_i}, L = \alpha_c 2\pi r + \lambda \tag{22}$$

Multiplying both sides of the reduced series (21) of formulas by a strictly constant scalar quantity ξ_m with the dimension of mass, we obtain two series

$$m_0 = \frac{\xi_d \xi_m}{\alpha_c 2\pi r_c}; m_{i0} = \frac{\xi_d \xi_m}{\alpha_c 2\pi r}; m_i = \frac{\xi_d \xi_m}{\lambda}; m_{i\Sigma} = \frac{\xi_d \xi_m}{L}, \tag{23}$$

$$m_0 = \frac{\xi_m H_0^2}{H_0 \pi H_0^2} = \frac{\xi_m}{\pi H_0}; m_{i0} = \frac{\xi_m H_i^2}{H_0 \pi H_0^2}; m_i = \frac{\xi_m H_i}{\pi H_0^2}; m_{i\Sigma} = \frac{\xi_m H_i^2}{(H_0 + H_i)\pi H_0^2} \tag{24}$$

where the definitions of masses are given: own interaction or rest m_0, interactions with an own partner m_{i0}, and the mass of the general interaction $m_{i\Sigma}$.

We can conclude that the fundamental properties of matter - "mass", are determined by the ratio of the perpendicular surface of the transverse path to the corresponding trajectory volume, as well as the reciprocal of the length of the transverse path for a given type of interaction.

With the help of the constants ξ_d, ξ_m, and ξ_τ, we combine the new constants with the dimensions of momentum ξ_p and energy ξ_ε

$$\xi_p = \frac{\xi_m \xi_d}{\xi_\tau} = \xi_m c; \xi_\varepsilon = \frac{\xi_m \xi_d^2}{\xi_\tau^2} = \xi_m c^2. \tag{25}$$

Multiplying both sides of the formulas of series (22), first by ξ_p and then by ξ_ε, we obtain formulas for determining the moment a and energies depending on the interaction class

$$m_0 c = \frac{h}{\alpha_c 2\pi r_0}; m_{i0} c = \frac{h}{\alpha_c 2\pi r}; m_i c = \frac{h}{\lambda}, m_{i\Sigma} c = \frac{h}{L} \tag{26}$$

$$m_0 c = \frac{\xi_p H_0^2}{H_0 \pi H_0^2} = \frac{\xi_p}{\pi H_0}; m_{i0} c = \frac{\xi_p H_i^2}{H_0 \pi H_0^2}; m_i c = \frac{\xi_p H_i}{\pi H_0^2}; m_{i\Sigma} c = \frac{\xi_p H_i^2}{(H_0 + H_i)\pi H_0^2}$$

$$m_0 c^2 = \frac{ch}{\alpha_c 2\pi r_0}; m_{i0} c^2 = \frac{ch}{\alpha_c 2\pi r}; m_i c^2 = \frac{ch}{\lambda}, m_{i\Sigma} c^2 = \frac{ch}{L} \tag{27}$$

$$m_0 c^2 = \frac{\xi_e H_0^2}{H_0 \pi H_0^2} = \frac{\xi_p}{\pi H_0}; m_{i0} c^2 = \frac{\xi_e H_i^2}{H_0 \pi H_0^2}; m_i c^2 = \frac{\xi_e H_i}{\pi H_0^2}; m_{i\Sigma} c^2 = \frac{\xi_e H_i^2}{(H_0 + H_i)\pi H_0^2}$$

where the constant h is a combination

$$h = \frac{\xi_m \xi_d^2}{\xi_\tau} \tag{28}$$

The constants ξ_m, ξ_p, and ξ_ε, by analogy with ξ_d and ξ_τ, are called the coefficients of the dimensions of mass, momentum, and energy.

It was shown in [8] that the constant h is numerically equal to Planck's constant.

Summing up the masses m_0 and m_i, we obtain the mass of the complex of γ_{0i}-particles with a β_ε-pair

$$m = \frac{\xi_m \left(H_0 + H_i\right)}{\pi H_0^2} = m_0 + m_i \tag{29}$$

the total energy, proceeding from series (27), is represented by the formula

© 2021 Global Journals

$$mc^2 = m_0c^2 + m_ic^2 \quad (30)$$

Comparing the formulas for determining the mass (23), (24), and energy (27), we can unambiguously conclude that the unity (or equivalence) of mass and energy is determined by the unity of their scalar dimensionless components for each class of interactions.

The laws of motion formulated by Newton are the result of generalizations of experimental observations based on the proposed property of matter - mass and the parameters of momentum and force associated with it.

These laws are passed on faith without answering questions of causality. Nevertheless, the question related to the First Law may turn out to be very informative: what is the reason for the finding of the considered body (test body) in a state of motion? The answer to this question was the beginning of the disclosure of the content of the formulations of Newton's laws.

The motion of physical bodies is caused by the presence in them of bound β-pairs with the potential of γ_{0i}-particles H_i. In this case:

- at $H_i = 0$, the body is at rest, at $H_i = const$, the body moves at a constant speed
- with a change H_i, the speed of motion also changes
- in the collision of two bodies, a redistribution of β_ε-pairs occurs, while the total potential of the pair remains unchanged.

Then a natural question arises: what is the quantitative relationship between the characteristics of the supplied β_ε-pairs and the observed patterns of motion of test bodies? That is, the problem arises of representing the laws of motion in the framework of a causal relationship.

When a β_ε-pair is introduced into a test body, a complex is formed with the participation of γ_0-particles of test bodies, thereby changing the structural frame of reference for describing β_ε-pairs, that is, the way of calculating the path and time. According to (18), the speed of free β_ε-pairs is set by the relation $c = H_i\xi_d / H_i\xi_\tau$ in the state of a complex with the γ_0-particle, the final path remains $H_i\xi_d$, while the flow of time changes, instead of $H_i\xi_\tau$, the motion is realized in the time interval $\xi_{0i} = (H_0 + H_i)\xi_\tau$ (17). From series (24) it follows that the mass of γ_0-particles is given by the ratio $H_0/\pi H_0^2$ and the mass of γ_{0i}- particles from β_ε pairs is given by the ratio $H_i/\pi H_0^2$.

In passing to the complex under consideration, the mass is determined by the ratio

$$\xi_m(H_0 + H_i)/\pi H_0^2 \quad (29).$$

Hence, to pass to the characteristics of the complex under consideration, it is necessary to multiply and divide the impulse of β_ε-pairs by the sum $(H_0 + H_i)$

$$m_ic = \frac{\xi_m H_i}{\pi H_0^2}\frac{(H_o+H_i)}{(H_o+H_i)} = \frac{\xi_m (H_o+H_i)}{\pi H_0^2}\frac{H_i}{H_o+H_i}c = mv \quad (31)$$

that is, as a result of the rearrangement carried out, from the mass $\xi_m H_i/\pi H_0^2$ we go over to the mass $\xi_m(H_0 + H_i)/\pi H_0^2$ and from the velocity $c = H_i\xi_d/H_i\,\xi_\tau$ to the velocity $v = H_i\xi_d/(H_0 + H_i)\xi_\tau$.

A similar procedure can be used to establish connections between other characteristics of β_ε-pairs and test bodies. So, for the total energy of interaction energy (27), we obtain:

$$m_ic^2 = \frac{\xi_m H_i^2 (H_0 + H_i)}{(H_0 + H_i)^2 \pi H_0^2} = \frac{\xi_m (H_0 + H_i)}{\pi H_0^2}\frac{H_i^2}{(H_0 + H_i)^2}c^2 = mv^2 \quad (32)$$

The equality $m_ic = mv$ (31) is a connecting basis between the characteristics of β_ε-pairs and test bodies, rather, it is the basic law of mechanics, on its basis, Newton's laws can be represented as a consequence of the following formulations:

- for $m_ic = 0, v = 0$ the body is at rest, with $m_ic = const, v = const$ that is, a body with a given mass moves at a constant speed;
- change of momentum

$$cdm_i / dt = d(mv) / dt = F \quad (33)$$

is a force;

- when two bodies collide, a redistribution of b β_ε-pairs occurs, while the total impulse of the colliding pair remains unchanged:

$$cdm_{i1} / dt + cdm_{i2} / dt = d(mv)_1 / dt + d(mv)_2 / dt = F_1 + F_2, = 0 \quad (34)$$

where the indices "1" and "2" indicate the participants in the collisions. From formulas (31) and (33) it follows that the greater the mass of the test body, the lower its velocity or the less it accelerates, that is, the value of the mass is a criterion of inertia to motion. In addition, it follows from (31) and (33) that neither the momentum cm_i or the force $F = cdm_i / dt$ depends on the characteristics of the test body. Based on series (26), (27), and equality (31), we impart relativistic momenta and energy to a complex of γ_{0i}-particles with a β_ε-pair

© 2021 Global Journals

$$m^2c^2 = m_0^2c^2 + m_i^2c^2 = m_0^2c^2 + m^2v^2 \quad (35)$$

$$m^2c^4 = m_0^2c^4 + m_i^2c^4 = m_0^2c^4 + m^2v^2c^2 \quad (36)$$

where the condition $m_0c \perp m_ic$ is taken into account by $H_i \perp H_0$ [9].

Multiplying both sides of equality (3) by the transverse path λ (22), we obtain the de Broglie equation for photons and particles with rest mass

$$m_ic\lambda = h; mv\lambda = h \quad (37)$$

– The similarity of formulas (37) with de Broglie's formulas does not at all mean that the nature of matter is dual, the transverse path λ is not at all conjugate with the particle wavelength, while formulas (37) simply combine the characteristics of the transverse (λ) and longitudinal motion c and v. The result of unification: the fundamental property of matter is mass

$$c\lambda = hm_i^{-1}; v\lambda = hm^{-1} \quad (38)$$

Planck's constant in this case is a proportionality coefficient with a complex dimension: the dimensionless parts $c\lambda$ andm_i^{-1}, $v\lambda$ and m^{-1} are equal, just historically they were assigned different dimensions, hence the role of Planck's constant λ.

In formulas (23), (24), and (29) the masses are calculated per one γ_{0i} -particle. The same formulas can be used to calculate the masses of elementary particles with relatively simple structures [10], in particular, the mass e^-, which in the state of its interaction consists of two γ_{0i} r-particles:

$$m_e = \frac{2\xi_m H_0}{\pi H_0^2} = \frac{2\xi_m}{\pi H_0}, \quad (39)$$

where m_e is the rest mass of the electron.

In the case of particles with a more complex structure, it is necessary to know their γ_{0i} -composition, taking into account the fact that, depending on the distance of interaction, the masses of the γ_{0i} -particles can differ significantly from each other [10].

For practical calculations, two potentials are introduced, H_p and H_1, to isolate the rest masses p^+ (m_p) m atomic unit m_1 which is constants:

$$m_p = \frac{\xi_m H_p}{\pi H_0^2}; m_1 = \frac{\xi_m H_1}{\pi H_0^2} \quad (40)$$

In the state of interaction, the mass p^+, m_{pi} and one atomic unit m m_1 is calculated by the formulas

$$m_{pi} = \frac{\xi_m (H_p + H_i)}{\pi H_0^2}, m_{1i} = \frac{\xi_m (H_1 + H_i)}{\pi H_0^2} \quad (41)$$

correspondingly, and the speed of their movement is represented by the relations

$$v_p = \frac{H_i}{H_p + H_i}c \text{ and } v_1 = \frac{H_i}{H_1 + H_i}c \quad (42)$$

where H_i is the interaction potential for one p^+ and one atomic unit, for $H_i \ll H_p$ and $H_i \ll H_1$

$$v_p = \frac{H_i}{H_p}c; v_1 = \frac{H_i}{H_1}c \quad (43)$$

If a physical body consists of N_{m1} atomic units, we represent its mass by the formula

$$M_{1i} = \frac{N_{m1}\xi_m H_1 + N_{mi}\xi_m H_i}{\pi H_0^2} = M_1 + M_i \quad (44)$$

where

$$M_i = \frac{N_{mi}\xi_m H_i}{\pi H_0^2} \quad (45)$$

the total mass of interaction with the participation of N_{mi} third-party partners.

From equations (40) and (41) it follows that at $H_i \ll H_1$ we obtain the mass

$$M_{1i} \approx M_1 = N_{m1}m_1 \quad (46)$$

in this case, if N_{m1} β_ε -particles with the potential H_i are brought to this body, then for one atomic unit we obtain the potential

$$H_{i1} = \frac{N_{mi}H_i}{N_{m1}}, \quad (47)$$

respectively, the velocity and momentum are given by the formulas

$$v = \frac{N_{mi}H_i}{N_{m1}H_c}c, M_1v = M_ic \quad (48)$$

where the designation for the total interaction mass (45)is used.

Thus, replacing the constant H_0 by H_1 or H_p in the previously given formulas, we obtain formulas for describing the motion from N_{m1} atomic units or N_{mp} protons.

© 2021 Global Journals

In physics, as a rule, one operates with two types of mass, already considered inert and gravitational M_G, which characterizes a body as a source of gravitational interaction. According to [7], the gravitational interaction at a distance is realized with the participation of particles generated by p^+ and performing a shuttle motion relative to p^+. In this case, we represent the gravitational mass of a physical body with H protons by the formula

$$M_G \quad \frac{\xi_m N_{mp} H_p}{\pi H_0^2} \tag{49}$$

Because the masses m_1 and m_p differ insignificantly and practically always $N_{m1} = N_{mp}$ HH, it is possible to accept the equality of inertial and gravitational masses with an acceptable accuracy

$$M_{in} \approx M_G \tag{50}$$

although they also have different physical manifestations.

From the given definition of gravitational mass, we can conclude that many elementary particles (e, muons, pions, etc.) can participate in gravitational interaction, not being sources of particle generation, with the participation of which gravitational interaction is realized.

What is the way to preliminarily determine the potential H_i? Let us consider electrostatic interaction, which belongs to the class of interactions with its partner and is characterized by the equation of motion (8). In this case, the carriers of the interaction are γ_E-particles that shuttle relative to their bases [8]. Interacting with the partner's base, each γ_E-particle turns into an γ_{0i}-particle, the potential of which is determined by the degree of remoteness from its base [8]. If one of the participants in the electrostatic interaction emits N_{q1} carriers of the interaction γ_E, the other N_{q2}, the equation of motion (8) can be represented in the form

$$\frac{N_{q1} N_{q2} H_i^2}{H_1 \pi H_0^2} = \frac{N_{q1} N_{q2} \xi_d}{\alpha_c 2\pi r} \tag{51}$$

where a test body with N_{m1} atomic units with potential H_1 is considered.

Multiplying both sides of the above equation by the coefficient of the dimension of energy, then multiplying and dividing the left side by $N_{m1} H_1$, and the right side by the square of the dimension of the charge ξ_q^2, we obtain

$$M_1 v^2 = \frac{N_{q1} N_{q2} \xi_q^2}{r} = M_{i\Sigma} c^2 \tag{52}$$

where indicated

$$v^2 = \frac{N_{q1} N_{q2} H_i^2}{N_{m1} H_1^2} c^2 \tag{53}$$

and formulas (32), (41), (43), and (46) were taken into account, while the numerical value ξ_q^2 was selected in such a way that the following condition be met

$$\frac{ch}{\alpha_c 2\pi \xi_q^2} = 1, \text{ or } c\hbar = \alpha_c \xi_q^2 \tag{54}$$

Based on the equation of motion of the proper interaction (7), as applied to the e^- ($N_q = 1$), taking into account formulas (39) and (54), we obtain

$$m_e c^2 = \frac{\xi_q^2}{r_e} \tag{55}$$

where $r_e = H_c \xi_d / 4$, is the classical electron radius.

Comparing the results obtained with the known formulas $m_e c^2 = e^2 / r_e$ and $e^2 = \alpha c\hbar$, one can conclude that $\xi_q = e$ and $\alpha_c = \alpha^{-1}$, that is, the constant α_c obtained by designation (5), is the reciprocal of one of the most important constants of physics, the fine structure constant α [13, 14]. From the equality of the dimension coefficient ξ_q to the elementary charge e it follows that the property of matter –the charge, is caused by the presence of rγ_E-particles in physical bodies, the number of which, emitted during the τ_{oi}-interval, determines the value of the charge

$$q = N_q \xi_q, q_1 = N_{q1} \xi_{q1}, q_2 = N_{q2} \xi_{q2}. \tag{56}$$

Combining the above designations with equality (52), we obtain the energy of the electrostatic Coulomb interaction

$$E_q = M_{i\Sigma} c^2 = \frac{q_1 q_2}{r} = M v^2. \tag{57}$$

According to the above, it is the general interaction energy formula (27), independent of the mass of the participants, that became the basis for the

© 2021 Global Journals

derivation of the Coulomb formula, respectively, and the energy determined using the Coulomb formula should not depend on the mass of the interaction participants. Thus, to calculate the potential H_i, or derivatives on its basis mm introduced a new property of matter – charge ($m_i c, m_{i0} c, m_{i\Sigma} c, \varepsilon_i, \varepsilon_{i0}, \varepsilon_{i\Sigma}, etc$).

Similarly, in thermodynamics, the formula is used to determine the energy of thermal motion of gas particles $E = 3kT/2$, also independent of the mass of gas particles (it was shown in papers [7,8] that $T \square H_i^2$), further, within the framework of the kinetic theory of gases, the relationship was established $mv^2 = 3kT$.

Thus, historically, information about H_i and its derivatives was obtained by introducing new properties of matter with characteristic dimensions. In general, the potentials of electric and magnetic fields themselves can serve as the basis for calculating the interaction potentials, like variants, proposed in [8].

Now let us define the order of quantities used in ST to describe the content of concepts and laws of classical mechanics. In [7,8], it was shown that not only constants c (19) and h (28) are combinations of ξ_d, ξ_τ and ξ_m, but also Newton's gravity constant G is a combination of the coefficients of dimensions:

$$G = \frac{\xi_d^3}{2\pi \xi_m \xi_\tau^2} \tag{58}$$

Combining the world constants c, h and G, we obtain:

$$\xi_d = \left(\frac{2\pi G h}{c^3}\right)^{1/2} \approx 1.015 \cdot 10^{-34} m; \xi_\tau = \left(\frac{2\pi G h}{c^5}\right)^{1/2} \approx 3.38 \cdot 10^{-43} s; \xi_m = \left(\frac{ch}{2\pi G}\right)^{1/2} \approx 2.176 \cdot 10^{-8} kg \tag{59}$$

It follows from the above formulas that ξ_d and ξ_τ differs numerically from the Planck units of length l_p and time t_p, however, this difference is of significant importance in describing the phenomena of the physical world 15.

Based on the formula for determining the mass e^- (39) and the bonds (4) and (5), we calculate constants H_0 and H_c:

$$H_0 = \frac{2\xi_m}{m_e} \approx 4.777 \cdot 10^{22} \tag{60}$$

$$H_c = \frac{H_0}{\alpha_c} = 3.46 \cdot 10^{20} \tag{61}$$

Using the formula (20), we determine the value of the potential H_i at a speed of 2000 km/h:

$$H_i = \frac{v}{c} H_0 \approx 1,667 \cdot 10^{15} \tag{62}$$

II. Conclusion

The regularities of the movement of physical bodies are considered at the hierarchical level of the manifestation of the mechanism of their movement. In this case, we are not talking about an endless decrease in the size of physical bodies to the level of a material point, but in deepening into the structure of matter to such a smallest organization, called γ_{0i}-particles, the laws of motion of which determine the laws of motion of physical bodies as a whole. The mechanism of motion of γ_{0i}-particles is composed of two components: transverse, always with a closed curvilinear trajectory with a weaving of a perpendicular surface relative to the direction movement and longitudinal, also with weaving of a perpendicular surface. The final trajectory of the γ_{0i}-particles is formed in the form of a three-dimensional figure, the volume of which is calculated using integrals related by an equation that is formally similar to the Stokes equations. For transverse motion, the volume of the formed trajectory is calculated by circulation along a closed path of a weaving perpendicular surface (axial vector). Using the second integral, the same result is calculated as a mixed product of three vectors. Integration is performed taking into account the interaction class. Depending on the nature of the participants, three types of interaction are classified, when the interactions are involved:

- own constituent particles;
- own and constituent particles of its partner;
- particles, carriers of momentum, and energy of third-party origin - β_ε-pairs.

In the same system, the sequential participation of γ_{0i}- particles in all classes of interaction is allowed. Each type of interaction corresponds to its equation of motion, in which the main constants are H_c and α_0 of structural origin, π, and χ_c- of geometric origin, associated with the transition from real to measurable linear trajectories. These constants are related by the relations: $\alpha_c = \alpha_0/\chi_c$, $H_0 = \alpha_c H_c$.

The main dimensionless variable in the equations of motion is the interaction potential H_i,

© 2021 Global Journals

which is used to determine the characteristic parameters of both kinematics and dynamics. When some bound γ_{0i}-pair (β_ε-particle) interacts with potential H_i or interaction mass$m_i = \xi_m H_i/\pi H_0^2$ (per one γ_{0i}-particle) with a particle of proper interaction with rest mass$m_0 = \xi_m H_0/\pi H_0^2$, a complex is formed with mass $m = m_0 + m_i$ and velocity of motion $v = H_i c/(H_0 + H_i)$, where ξ_m and c, respectively, are the coefficients of the dimensions of mass and velocity. Numerically, c is equal to the speed of light in a vacuum, ξ_m is equal to the Planck mass unit. Because the particle of its own interaction ultimately remains at rest, the state of motion of the entire complex is due to the presence of a β_ε-pair, respectively, and the speed and momentum mv of the complex under consideration is caused by and equal to the momentum of the γ_{0i}-particle from the β_ε-pair$m_i c = \xi_p H_i/\pi H_0^2$, $= mv$, where ξ_p is the coefficient of the impulse dimensionality, $\xi_p = \xi_m c$.

The equality $m_i c = mv$ can be considered the basic equation of mechanics, in particular, all formulations of Newton's laws follow from this equality:

- At $m_i = 0$ or $m_i = const$, the body is at rest or in a motion at a constant speed;
- $cdm_i/dt = F = d(mv)/dt$ is the definition of force;
- During the collision of physical bodies, a redistribution of β_ε-pairs occur between the participants of the collisions with the preservation of the total momentum: $c\sum_n^n m_i = const$, or $\sum_n F_n = cd\sum_n m_{in}/dt = 0,$ where n is the number of colliding pairs.

Thus, the basis of Newtonian formulations of the laws of motion of physical bodies is the presence, change, and redistribution of β_ε-pairs.

References Références Referencias

1. Isaac Newton "Philosophiae Naturalis Principia Mathematica" (Mathematical Principles of Natural Philosophy), University of California Press, 1999, 974pp.
2. U. Jammer. Concept of Mass in Classical and Modern Physics, Courier Corporation, 1977, p.320.
3. F. Wilczek. The Origin of Mass, Mod//Phys Lett. 2006, V.21, p. 701-712.
4. H. Fritzsch, The problem of mass and nass generation, e-print ArXiv:hep-ph./9605300, 1996.
5. Gordon Kane, The Mysteries of Mass. Scientific American June 27, 2005, Retrieved July 5, 2013.
6. John Roche. What is the Mass. European Journal of Physics, 2005, 26(2) 225. DOI:10.1088/0143-0807/26/0/000.
7. Kh.A.Kirakosyan Structural Physics Structural Content of the Basic Contents and Physical Law. Moscow, Flinta, ISBN 978-9765-1087-6, 2011, 420 p. (in Russian)
8. Kh. Kirakosyan, On the Structural Content of Fundamental Properties of Matter and UniversalConstants of Physics. Theoretical Physics vol.3, No 01, pp 1-27. 2018. Available: https://dx.doi.org./10.22606/tp.2018.31001
9. Kh. Kirakosyan, On the United Description of the Motion of Physical Bodies. New Horizons on MathematicalPhysics. Vol. 3, No 3. September 2019. https//dx.doi:org/10.22606/nhmp2019, 3301.
10. Kh. Kirakosyan. Mass, Fine Structure Constants, and the Classification of ElementaryPartile's by Mass. Journal of Modern Physics, vol 12, No. 7, May 2021. DOI: 10.4236/jmp2021.127061.
11. Unit of mass (kilogram). The International System of Units. Edition VIII, 2006.
12. Kilogram: Mass and Planks Constant, NIST, 18.11.2018.
13. R.P. Feynman, QED: The Strange Theory of Light and Matter. 1985. Princeton University Press. p. 129.
14. M.A. Shebron Fine Structural Constants from Sommerfeld to Feynman. Journal of Advances in Physics, 16, 1 335-343, August 2019. DOI: 10.24297/jap.v.16.1.8402.
15. Kh. A Kirakosyan To the Content of Planck Units Theoretical Physics. Vol.3, №2, June 2018, pp. 33-36.

© 2021 Global Journals

Global Journal of Science Frontier Research: a
Physics and Space Science
Volume 21 Issue 6 Version 1.0 Year 2021
Type: Double Blind Peer Reviewed International Research Journal
Publisher: Global Journals
Online ISSN: 2249-4626 & Print ISSN: 0975-5896

Laser Challenge of China

By Acad. Victor V. Apollonov

A. M. Prokhorov GPI RAS

Preamble- Chinese President Xi Jinping, at a meeting with delegates of the People's Liberation Army of China (PLA) during the last session of the National People's Congress (NPC), demanded the introduction of scientific discoveries and innovative technologies in the army. Xi Jinping noted that new technologies are the key to modernizing the Armed Forces. The Chinese leader discussed with the military how to achieve the goals set in the field of national defense and army development and the implementation of the 13th five-year plan for the development of the armed forces. It is safe to say that laser weapons (LW) are on the agenda of China/1/.

GJSFR-A Classification: *FOR Code: 240402*

Strictly as per the compliance and regulations of:

© 2021. Acad. Victor V. Apollonov. This research/review article is distributed under the terms of the Attribution-NonCommercial-NoDerivatives 4.0 International (CC BY-NC-ND 4.0). You must give appropriate credit to authors and reference this article if parts of the article are reproduced in any manner. Applicable licensing terms are at https://creativecommons.org/licenses/by-nc-nd/4.0/.

Laser Challenge of China

Acad. Victor V. Apollonov

I. Preamble

Chinese President Xi Jinping, at a meeting with delegates of the People's Liberation Army of China (PLA) during the last session of the National People's Congress (NPC), demanded the introduction of scientific discoveries and innovative technologies in the army. Xi Jinping noted that new technologies are the key to modernizing the Armed Forces. The Chinese leader discussed with the military how to achieve the goals set in the field of national defense and army development and the implementation of the 13th five-year plan for the development of the armed forces. It is safe to say that laser weapons (LW) are on the agenda of China/1/.

Chinese scientists and technologists have thought and worked on the LW problem for a long time. Since the 1970s, industry and the military have laid the groundwork for seriously figuring out how to achieve practical power levels, how to steer a beam, and how to deliver laser radiation over long distances. The Department of Defense officially recognized lasers as the likely weapon of the future back in that century, initiating official research and development. The PRC, following the United States, Japan, Germany, France and England, plans to equip the country's fighter aircraft with light and compact LW. About this on the official website for the procurement of weapons for the PLA were posted two announcements of tenders for the creation of appropriate equipment and software. Under the terms of the first tender announced by the PLA, applicants for the contract must develop a suspended aviation container for the aircraft. The second tender included requirements for the creation of software for the management of this LW. The combat laser must not only protect the PLA Air Force planes from enemy missiles, but also hit various targets, including aircraft, ground and surface targets. The Chinese military are planning to receive a universal laser module, which in the future will be able to become a tactical aircraft of sea, land and aircraft based. Airborne LW will be able to intercept approaching missiles and shoot down enemy aircraft in aerial battles. The significant advantage of LW over missiles and firearms makes it an indispensable tool for air combat. Aviation LW will be able to provide not only protection against missile attacks from the ground and from the air, but also the superiority of Chinese aviation in air battles.

Author: A.M. Prokhorov GPI RAS, Moscow, Vavilov str.38, Russia.
e-mail: vapollo@rambler.ru

Over the past few years, the PRC has been very actively involved in the development of LW. At the Air show China 2018 exhibition in Zhuhai, the China Aerospace Science and Technology Corporation (CASIC) demonstrated the LW-30 self-propelled laser warhead designed to protect objects from unmanned aerial vehicles, light aircraft and helicopters. The 30 kW laser installed on the LW-30 is capable of hitting targets in the functional mode at a distance of up to 25 kilometers. The installation has already been adopted by the PLA. At the same time, the central television of China showed a new development - a mobile LW installation. Details about the purpose and technical parameters of the new development were not disclosed, although, from a link to a local source, it becomes clear that the system is designed to instantly destroy targets near the coastline, and its main targets will be small boats and unmanned aerial vehicles. When installed on aircraft, this LW can potentially protect against possible missile attacks and dominate in close combat, says the Global Times. The Chinese media noted that the created LW module is tactical. If it were a laser designator for targeting smart bombs, then it would be called that - a laser targeting module. Recently, the Chinese television program also claimed that China has already developed a prototype of a 100-kW aircraft LW. It referred to a document entitled "Investigation of Energy Storage and Power Source for Airborne LW", prepared by the State Institute of Manufacturing Technologies AVIC and the Military Representation of Special Equipment of the PLA Missile Forces. It is important to note here that many other countries are working on the problem of creating LW. For example, Russia recently announced that the next generation fighter could be armed with an LW complex, and the US-announced project called "Self-protection High Energy Laser Demonstrator" will consist of a laser, a power and cooling unit and a beam control system to focus the LW complex on a target. In February at the International Defense Exhibition and Conference in the United Arab Emirates China showed off its Silent Hunter laser complex, which is capable of knocking out machine engines at a distance of one mile and has a power of up to 70 kW. This information raises a reasonable question, what is in the arsenal of China in the field of LW, if they openly show such complexes at international exhibitions. For comparison: the operating LW complex on the American ship "Ponce" has a capacity of 33 kW. Earlier, China presented at an exhibition in South Africa one more ground-based mobile complex "Low Altitude Guard II" based on a

© 2021 Global Journals

conventional military truck and with a laser installation with a power of 30 kW to destroy drones and helicopters. Recently, foreign and Russian media again began to cite material from the Chinese Optics magazine, where leading Chinese scientists in the field of military lasers proposed to place a five-ton chemical laser into orbit by 2023, which would disable US satellites. The same scientists said that back in 2005, China conducted successful tests to disable orbiting satellites of its own production using a ground laser with a power of up to 100 kW. For the Chinese army, airborne lasers are more than potentially useful weapons for destroying enemy aircraft or defending their aircraft against anti-aircraft missiles. LW can also be a key component of ballistic missile defense. The Chinese media admit the difficulty of creating airborne complexes of the LW. "This type of weapon has not yet become widespread due to remaining technical difficulties, including problems with power supplies and insufficient output power of the lasers themselves due to their large weight and size."

A prime example of how not to develop an airborne laser for China is the US Missile Defense Agency's YAL airborne laser test bed. This ambitious attempt to turn the Boeing 747 into a flying aircraft ended in failure. Armed with a giant chemical laser powered by an environmentally hazardous propellant, the YAL was designed to destroy ballistic missiles. However, it turned out to be so expensive and tactical ranges so short that then Defense Secretary Robert Gates scrapped the project in 2009. However, the YAL concept dates back to the 1980s and grandiose ideas such as Ronald Reagan's Star Wars missile defense project. The current focus of the Chinese military is on a more compact and more practical aircraft that can be mounted on land or sea vehicles, as well as on airplane-carried harnesses. Airborne tactical aircraft based on modern solid-state (s/s) technology, according to the Chinese military, is approaching its final intelligent form.

Today, the leaders of the PLA Armed Forces are beginning to actively figure out how to integrate laser systems into existing weapons systems. Despite the fact that lasers have been around for almost as long as rocketry itself, modern military forces take a fair amount of time to effectively deploy the LW. The problem in previous years was that these laser systems were too bulky and heavy. They were physically too large to be effectively used for tactical purposes, either on a truck, or on an airplane, and even on a ship, without taking up large spaces of the carrier. Naturally, there are some limitations as to which system can run on which delivery vehicle. Not all carriers can support 100-150 kW class systems. Since s/s lasers are powered by electricity, they can last long enough until that energy runs out. s/s lasers ideally can counter fast moving targets with high accuracy and offer the necessary variability that can be used for different types of impacts, from simply observing targets to causing serious or unacceptable damage to them.

II. From "Laser Monsters" to Compactness

Modern new threats make high-energy LW complexes more practical than they were earlier during the creation of laser monsters on gas-dynamic, electric-discharge, chemical and alkaline vapor bases. Today, the Chinese Ministry of Defense, like the military of other advanced countries, is ordering high-energy LW systems for field tests in order to determine the most effective designs of complexes and methods of protection against high-tech enemy military equipment (EME). Modern s/s LW systems must be able to track the target, hit it and have a lethal effect on it in order to completely neutralize it. The systems themselves lack tactically significant size, weight, and power. Previously, these systems could not be effectively integrated with existing weapons. But three important components of the LW complexes have changed. First, the development of fiber and disk laser technology has allowed the systems to be “most efficient at converting electricity into a powerful beam, which means that the weight and size of the power supply and heat exchange systems are minimized as efficiency is high. Secondly, the beam has become more qualitative from the point of view of homogeneity over the beam cross section and its divergence. Third, the commercial industrial base is now becoming much cheaper and is able to quickly provide many of the basic components of the LW complexes. China, like most countries with laser technology, is developing the ideology of combining the output power of a large number of individual lasers, rather than trying to create in the very beginning a single, much larger beam. However, this approach is suitable for the creation of modern tactical aircraft systems with an output power within 500 kW, which is determined by the physical and technical limitations of the technology used.

III. Market Influence on the Development of LW Technologies in China

Commercial laser technology has significantly influenced the development and powerful acceleration of military LW technology. Fiber optics have become widely used for communication purposes, and a wide range of fiber laser machines have made industrial cutting, welding and drilling much more efficient. Smart phones and other small electronic devices required very high quality fiber "scalpels" to focus the laser beam very accurately and in an extremely small size. The development of fiber lasers for defense purposes has in turn led to the development of the idea of combining the

© 2021 Global Journals

radiation of individual fiber lasers with each other using highly efficient spectral elements. Along with the ability to focus the beam on the target, the LW must also ensure the propagation of radiation over long distances. Therefore, the creation of optical telescopes based on silicon carbide not only for laser physics should be considered one more positive output of the LW technology. The development of technology for obtaining high-quality fiber for communication purposes was important for a wide range of technologies. Manufacturing of a large range of fibers, material purity, fiber doping techniques with rare earth elements, creation of waveguides and the ability to draw large-sized and high-quality fibers - all this was successfully developed by the industry of developed countries , and hence China, which appeared to the world in the form of a huge technological platform with cheap labor. The technology for the production of semiconductor arrays and laser diode arrays for pumping lasers is also the essence of military lasers.

When it comes to industrial laser cutting and welding, these laser applications use highly efficient electrical circuits, power switching circuits, and the fiber itself, which is capable of withstanding high power density. As for target tracking with the help of LW, it requires fast and simultaneous processing of video information from several high-speed cameras. The technology behind this fast processing of information is based on developments widely used in the video game industry. Using all these high-speed game processors that are capable of processing such volumes of incoming data and performing the necessary visualization, it becomes possible to launch the developed algorithms and in the interests of creating truly effective LW complexes. Along with this, there is also a strong opposite effect on the LW industry. Game development of artificial intelligence (AI) and machine learning technologies, which already today help in the development of target search algorithms, help to significantly improve the aiming procedure itself. Simultaneously with this, rapid development high-energy LW can also benefit the modern electric vehicle market. Common to LW and electric vehicle technology are the processes of energy storage at high power, the processes of controlling the temperature regime of circuit elements, the important ability to effectively transfer high power to the emitter, and hence the technologies of cables and electrical connections, switching circuits and other technologies for redistributing energy in the engine. On the other hand, lasers are widely used in many industries, with markets spanning the defense, industrial and medical sectors. Gas lasers, classic solid state lasers, electric discharge lasers and excimer lasers are used in major industries such as materials processing and automotive. Today, significantly lower power lasers are playing an increasingly important role in the development of many new technologies, including targeting, communications, surgical and diagnostic applications. Thus, this rapidly expanding market for China seems to be a very important foundation not only for economic prosperity, but also a factor in the rapid growth of defense technologies and, in particular, the improvement of LW.

IV. What Does China and the World Expect Tomorrow?

Recently, there has been a lot of talk in the world about the need to further increase the output power of the s/s LW complexes. The world power level of compact and lightweight s/s fiber laser systems does not exceed 300 kW. The principal competitor to the "fiber" is a disk laser, a single module of which has already reached the output power level of 50-75 kW. In China, both of these laser designs are actively developing, and their element base is also developing. China has long been a supplier of a wide range of s/s components to the world market. laser systems and more. Chinese scientists and technologists are well aware that the future belongs to compact, lightweight and reliable s/s systems for the development of a new class of technologies and the creation of the entire line of tactical and strategic LW systems. As the output power of such equipment grows in the world, trading in LW complexes of lower power, by analogy with laser metalworking machines, will become more and more possible and cost-effective. Therefore, one should expect a further increase in the output power of technological laser equipment and LW complexes produced in China, saturated with state-of-the-art AI systems that control them.

V. High-Energy Laser Market

According to SIPRI, the global high-energy laser market will reach $ 14.74 billion by 2026, which will average 12.4% growth from 2021 to 2026. This industry is one of the hardest hit by the Covid-19 pandemic. Today, the market began to recover again after a corresponding increase in demand for laser systems and laser technological equipment:

- High energy lasers have played a critical role in today's society with an increasing number of applications in manufacturing, communications and defense. Thanks to a growing defense budget and research grants, the military, including China, is introducing high-energy laser equipment and investing heavily in research and development. For example, in May 2021, the US Army began testing a prototype of s/s LW for short-range air defense; This sample is a 50 kW LW connected to a Stryker A1 vehicle that can detect, capture, track and destroy airborne threats
- Countries with high military spending are interested in the development and implementation of laser

© 2021 Global Journals

technologies within their capabilities. According to the Stockholm International Peace Research Institute ("SIPRI" since 1966 provides data, analysis and recommendations for armed conflict, military expenditure and arms trade as well as disarmament and arms control), global defense spending hit a record $ 1.98 trillion. US in 2020, an increase of 2.6% over the previous year. Defense developments, including laser technology, are expected to pave the way for new technology and modernization. The defense industry in China, like the industry in other countries, provides a significant share of R&D and applications of laser technology.

– With the proliferation of drones in the defense sector, the demand for solutions that can track and destroy them has increased. For example, in March 2021, the European missile manufacturer MBDA (UK) and the French company CILAS (France) agreed to cooperate with an electronic warfare and reconnaissance specialist to study the possibilities of joint development of high-energy LW systems for the destruction of unmanned aerial vehicles. It is expected that in the coming years the number of such associations in the military sphere will increase.

- It is expected that the use of high-energy s/s lasers in missile defense systems will expand, including in China, as the world's major defense giants increasingly adopt these solutions and show interest in developing such solutions. For example, in March 2021, Israel's MoD showed interest by soliciting funding and expertise from the United States for its air and missile defense lasers. Israel's current prototypes have achieved an output radiation of almost 100 kW, while the United States already has prototypes of s/s 300 kW aircraft capable of destroying cruise missiles.
- Demand for aircraft s/s systems in naval forces around the world is growing rapidly to combat airborne threats such as missiles and unmanned aerial vehicles. LW has proven effective against missiles and is used as the first line of the EME security network. For example, a high-energy aircraft complex with a built-in blinding system and a HELIOS "Lockheed Martin" surveillance system is planned to be placed on board the DDG destroyer of flight IIA "Arleigh Burke" in 2021. The US Navy has officially adopted the LW complex into the Aegis combat system.
- In addition, LW is being tested for the ability to disable unmanned aerial vehicles by integrating such weapons on board naval vessels. For example, in May 2020, USS Portland successfully disabled an unguided aircraft while testing a new high-energy LW system. Northrop Grumman developed the system and the test was carried out after an incident with a Chinese destroyer, where a US Navy patrol plane "P-8A Poseidon" fired a weapon-grade laser.

– In addition, it should be said that many countries are also seeking to expand their naval defense capabilities to contain and neutralize the threats of a potential adversary. China is among the countries that intend to fight for their security, and therefore for parity in the creation of a modern LW. The PLA Navy has tested its s/s fiber tactical laser system, which, according to foreign experts, bears a striking resemblance to the US Navy LW, which today is close to achieving absolute target hitting accuracy at the already achieved power level.

VI. Conclusion

Over the past decades, China has done and is doing a lot for the well-being of the Western world. China had to develop dirty and environmentally hazardous industries, put up with low wages for hard work of performers and much more. Why not, then, to take an advantage of China`s position as a world workshop and to do something for own defense! Moreover, the situation around China has become much more complicated lately. A talented and hardworking scientific and technical contingent of China is able to solve complex problems and effectively introduce new modern technologies into the country's industry, which, as President of the People's Republic of China Xi Jinping said, is the key to modernizing the Chinese Armed Forces.

References Références Referencias

1. Russian newspaper VPK №39 2021.

© 2021 Global Journals

Global Journal of Science Frontier Research: a
Physics and Space Science
Volume 21 Issue 6 Version 1.0 Year 2021
Type: Double Blind Peer Reviewed International Research Journal
Publisher: Global Journals
Online ISSN: 2249-4626 & Print ISSN: 0975-5896

An Overview of Optical Fibers

By Hayat Rezgui

Abstract- The very rapid growth in the need for communication, both quantitatively in terms of telephone links and in terms of quality as a result of the diversification of new services related to the introduction of digital technology, is making it necessary again to design a new system. Optical fiber transmission is becoming more and more common in modern society. The optical fiber has the property of driving light and serves in terrestrial and oceanic data transmissions, as well as in medical or industrial imaging applications. Today, data transfer must provide extreme performance. This requirement can only be fulfilled with perfect optical fibers, integrated in fiber optic cables of irreproachable quality.

Keywords: *optical fibers, single-mode fiber, multi-mode fiber, refractive-index profile.*

GJSFR-A Classification: *FOR Code: 020599*



Strictly as per the compliance and regulations of:

© 2021. Hayat Rezgui. This research/review article is distributed under the terms of the Attribution-NonCommercial-NoDerivatives 4.0 International (CC BY-NC-ND 4.0). You must give appropriate credit to authors and reference this article if parts of the article are reproduced in any manner. Applicable licensing terms are at https://creativecommons.org/licenses/by-nc-nd/4.0/.

An Overview of Optical Fibers

Hayat Rezgui

Abstract- The very rapid growth in the need for communication, both quantitatively in terms of telephone links and in terms of quality as a result of the diversification of new services related to the introduction of digital technology, is making it necessary again to design a new system. Optical fiber transmission is becoming more and more common in modern society. The optical fiber has the property of driving light and serves in terrestrial and oceanic data transmissions, as well as in medical or industrial imaging applications. Today, data transfer must provide extreme performance. This requirement can only be fulfilled with perfect optical fibers, integrated in fiber optic cables of irreproachable quality.

Keywords: optical fibers, single-mode fiber, multi-mode fiber, refractive-index profile.

I. Introduction

The science of optical fibers is a fascinating field. A great amount of research work is being carried out in all parts of the world to promote optical fiber technology. One of the most interesting developments in recent years in the field of telecommunication and data transmission systems is the use of optical bers to carry information in a way similar to that employing radiowaves and microwaves [28]. Reliable and widespread sources for transporting laser beams at a distance, optical fibers come in many forms.

II. Technical Background and Significance

Optical fibers are one of the perfect physical environment and important scientific achievements in the last century [2, 26]. They are certainly of con siderable interest because they represent the best current way to transport very high debits of digital information. The needs in this area are likely to increase very strongly in the near future [9, 25]. It is by this means that circulate over 80% of global long distance traffic information.

As early as the 1940s engineers and scientists began to consider that telecommunications in the distant future would be through optical channels [18]. The idea of using optical fibers to transmit information appeared in the early 1960s with the advent of lasers, and the advantages of transmitting information [9, 19, 25] by optical fibers are multiple compared to other communication media [12] (optical fibers are much lighter and thinner compared to the conventional copper cables, and they are cheaper than copper wires. One pair of optical fibers carries a rate of 10 times stronger than 250 pairs of copper wires). Thanks to comfort and energy saving provided by optical fibers, these last are perfect for:

- Medical applications.
- The lighting field.
- The road transport system.
- Various military applications requiring a high quality equipment.

It was in 1966 that was launched the idea of carrying optical signals (over a fiber) over long distances, but it will take years to master the manufacturing processes and to control the composition of materials which decisively influences the attenuations (losses) of the transmitted signal. It will then be possible to obtain attenuations that are small enough to make possible the transmission of signals over distances large enough to make the optical technique competitive. Starting in 1960 at 1,000 decibels per kilometer (*dB/km*), attenuation fell to 20 *dB/km* in 1975 and then to 0.2 *dB/km* in 1984.

Optical fibers are rapidly becoming the transmission medium of choice for new telecommunication [1]. They have played a key role in making possible the extraordinary growth in world-wide communications that has occurred in the last 25 years, and are vital in enabling the proliferating use of the Internet [8]. However, more and more, optical fibers are becoming very popular in a very short time and making an impact and serious commercial inroads in other fields besides communications, such as in industrial sensing, bio medical laser delivery systems, military gyro sensors, as well as automotive lighting and control [15].

Optical Fiber is new medium, in which information (voice, data or video) is transmitted with high speed, following the transmission sequence [24].

III. Features and Properties of Optical Fibers

An optical fiber (or a fiber optic cable) is a cylindrical (standard form) dielectric waveguide (made of low-loss materials), it is a thin lament of glass, assumed to be infinitely extended along its propagation axis, denoted by OZ. An optical fiber is flexible and transparent fiber which permits transmission of light waves over longer distances and at higher bandwidth

Author: Laboratory: E.D.P.N.L., Department of Mathematics, École Normale Supérieure, B.P. 92, Vieux Kouba, 16308, Algiers, Algeria.
e-mail: rezguihayat@gmail.com

© 2021 Global Journals

(data rates) than other forms of telecommunications, it is used too to propagate radiation in the infra-red to visible region of the spectrum [11, 21, 24, 28].

a) Basic construction of optical fiber

An optical ber consists mainly of 4 elements (layers) [4, 6, 23, 28]:

- Core: (the innermost region of the fiber), center of the structure. It is the area for the propagation of light rays. It carries the signal.
- Cladding: (an external mantle), a zone surrounding the core, made of a material whose refractive-index is lower than the core index, so as to con ne the propagation of light rays and to keep the core clean.
- Protective coating: it is a primary buffer material used to help shield the core and cladding from physical degradation and to protect against abrasion, moisture, solvents and other contaminants.
- Jacket: additional (outer) layer which holds one or more fibers in a cable, it is used to prevent damage and to increase the strength of the fiber.

Both the core and the cladding are made of glass, but the index of refraction of the core is slightly higher than that of the cladding. The difference in materials used in the making of the core and the cladding creates an extremely reflective surface at the point in which they interface. The protective coating and the jacket do not have a direct role in light confinement. Their role, however, is to provide mechanical support and protection for the inner core and cladding layers [4]. The light is transmitted through the core but to a small extent, it travels in the cladding and so the optical clarity of the cladding is still important [6].

A typical optical fiber cable usually includes several optical fibers around a central steel cable. Various protective layers are applied, depending on the harshness of the environment where the cable will be situated.

b) Types of optical fibers

Generally, optical fibers are of two types: [28]

i. *First type: Single-mode (SMF)*

The simplest type of optical fiber is called single-mode fiber, or alternatively mono-mode fiber. It has a very thin core about 5 10 μm in diameter. It supports only one mode. In a single-mode fiber, all signals travel straight down the middle without bouncing o the edges. Cable TV, Internet and telephone signals are generally carried by single-mode fibers, wrapped together into a huge bundle. Cables like this can send information over 100 km (60 miles).

ii. *Second type: Multi-mode (MMF)*

Another type of optical fiber is called multi-mode fiber. Each optical fiber in a multi-mode cable is about 10 times bigger than one in a single-mode cable. This means light beams can travel through the core by following a variety of different paths, in other words, in multiple different modes. Multi mode cables can send information only over relatively short distances and are used (among other things) to link computer networks together.

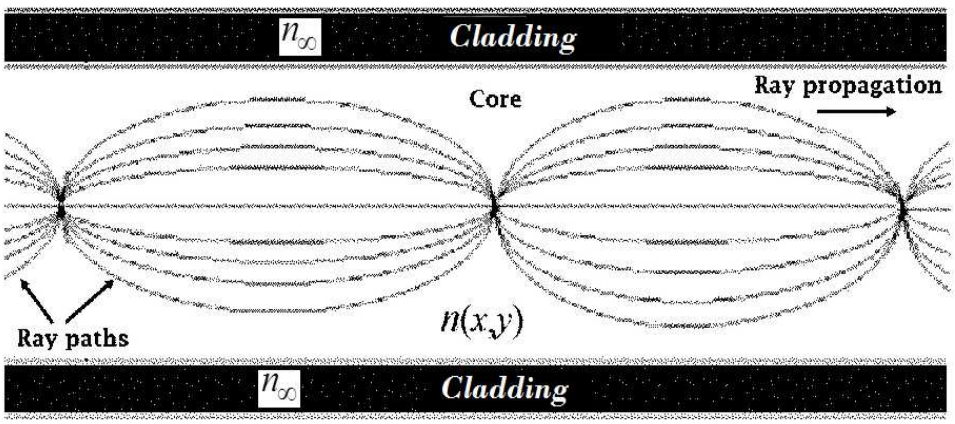

Figure 1: Light propagation in a multi-mode graded-index optical fiber (having an homogenous cladding)

Multi-mode optical fibres are dielectric waveguides which can have many propagation modes. Light in these modes follows paths that can be represented by skew rays as shown in Figure 1. The cladding has a refractive index n_∞, a parameter related to the dielectric constant, which is slightly lower than the refractive-index of the core region [13, 18].

Multi-mode fibers are no longer used in long distance (> 10 km) telecommunications due to the significant performance advantages offered by single mode systems. Many short-link applications, for which intermodal dispersion is not a problem, still make use of multi-mode fibers.

© 2021 Global Journals

IV. Uses for Fiber Optics

Optical fiber cables are in use for telephone data since 1980 [16]. They have become in the last few years an extremely attractive method of data transfer [27]. They have a wide number of applications, they are used as:

- Light guides in medicine.
- Lighting.
- Imaging optics.
- Aerospace industry.
- Industrial tool.
- Other applications.

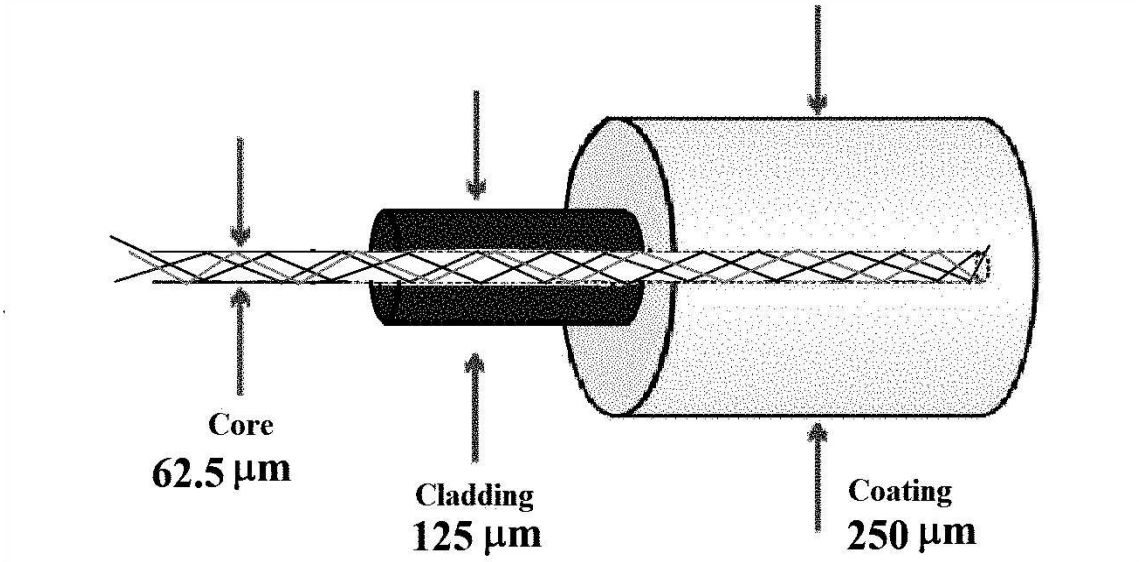

Figure 2: Geometry of a typical multi-mode optical fiber (having a circular cross section)

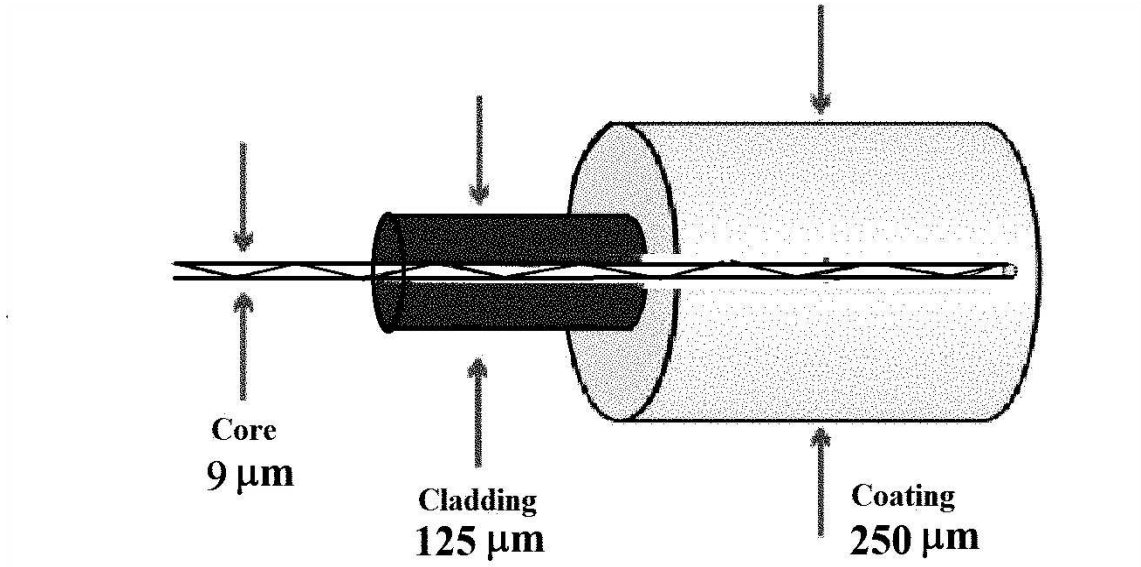

Figure 3: Geometry of a typical single-mode optical fiber (having a circular cross section)

Shooting light down a pipe seems like a neat scientific party trick, and you might not think there'd be many practical applications for something like that. But just as electricity can power many types of machines, beams of light can carry many types of information, so they can help us in many ways. We don't notice just how commonplace fiber-optic cables have become because the laser-powered signals they carryflicker far beneath our feet, deep under office floors and city streets. The technologies that use it computer networking, broadcasting, medical scanning, and military equipment do so quite invisibly [15, 17, 23, 25].

© 2021 Global Journals

V. Refractive-Index Profile

As the refractive-index is simply a ratio of the speed of light in a material to the speed of light in free space, it does not have any units [6]. The refractive-index pro le describes the relation between the indices of the core and cladding. It refers to the variation of the refractive-index in a cross section of the optical part of the fiber. Generally, two main refractive-index pro les exist [18, 24, 26] (see Figure 2.3):

- Step-index (uniform-core): frequently used type of fiber.
- Graded-index (nonuniform-core).

The standard core diameter of step-index optical fiber is typically between 8 and 10 μm while the diameter of the cladding is about 125μm, whereas typical graded-index fibers have core diameter of 50, 62.5, 85 or 100 μm and a cladding diameter of 125 μm [5, 26]. The refractive-index changes abruptly between the core and the cladding of a step-index optical fiber [6], while the transition (of the index of refraction) between the core and cladding is gradual in a graded-index optical fiber.

The interest in graded-index optical fibers is increasing owing to their extensive possible applications. Without these components, it is difficult to imagine any further development of fiber-optical systems for transmitting information, medical and industrial endoscopy, copying technology, fast computer input-output devices, and facsimile communication [3].

Table 1: Refractive-index of some substances at 20°C [20]

Material	Refractive-index
Air	1.00029
Acetone	1.36
Pure alcohol	1.32
Amber	1.54
Crystal	1.60 to 2.00
Diamond	2.42 to 2.75
Carbon disulfide	1.628
Carbon dioxide	1.00045
Ethanol	1.361
Silicone oil	1.393 to 1.403
Benzene	1.501
Water	1.33
Emerald	1.57
Ice	1.31
Glycerine	1.47
Lapis lazuli	1.61
Opaline	1.45
Plastic	1.460
Plexiglass	1.51
Polystyrene	1.20
Ruby	1.78
Quartz	1.55 or 1.64
Sapphire	1.77
Topaz	1.61
Tourmaline	1.27
Glass	1.50
Crown glass	1.52
Glass int	1.56-1.65-1.89
Kerosene	1.44
Turpentine oil	1.47

VI. Advantages of Fiber Optics

Large technology companies such as *Google* have expanded into the fiber optic services with *Google* fiber. The optic communication components are widely applied in today's telecom field thanks to many advantages associated with using optical fibers, of which we quote:

- Dielectric benefits

An optical fiber guarantees a perfect electrical insulation between transmitter and receiver [16]. The optical fiber is completely immune to many environmental factors that affect copper cable. The core is made of glass, which is an insulator, so no electric current can flow through [7].

© 2021 Global Journals

- *Less susceptibility to temperature fluctuations*

You can run fiber cable next to industrial equipment without any worries. Optical fibers withstand extreme temperatures better than electrical cables [16]. The optical fiber is also less susceptible to temperature fluctuations than copper and can be submerged in water [7].

- *Signal strength*

The signal strength of fiber-optic Internet does not degrade as quickly over distance. Organizations in relatively large spaces could benefit from better signal strength throughout the facility.

- *Flexibility*

Because fiber optics are so flexible and can transmit and receive light (they are used in many flexible digital cameras).

- *Ease of installation*

Optical fibers can be more easily produced and installed. Long lengths make fiber-optic cable installation much easier to be used in temporary or portable installations. Optical fiber cables can be installed with the same equipment used to install copper and coaxial cables, with some modifications due to the small size and limited pull tension and bend radius of optical cables.

- *Speed*

Fiber-optic Internet is many times faster than even the highest-speed copper Internet connections.

- *Small size*

Optical fibers are smaller in diameter than copper lines.

- *Lightweight*

Optical fibers are lightweight.

- *Non- flammable*

Because no electricity is passed through optical fibers, there is no re hazard.

- *Secure transmission*

Hackers and information thieves are a major threat in today's cyberspace. Cable tapping and signal interception can easily be per formed with basic business Internet cables. Optical fibers are the most secure medium available for carrying sensitive data, since intercepting data transmission through a fiber cable is difficult. Optical fibers are difficult to tap. As they do not radiate electromagnetic energy, emissions cannot be intercepted. As physically tapping the fibre takes great skill to do undetected. In the rare cases that fiber optic cables are tapped, visible light transmissions make it easy to identify the hacked cables.

- *Direct connection with no echoes*

Thanks to optical fibers, you have a direct connection with no echoes, while you often hear an echo on the telephone because the signal is bounced o a communications satellite.

- *Long transmission distance*

The promise of fiber optics was the possibility of increased transmission rates [6].

A fiber-optic system using a glass fiber is certainly capable of carrying light over long distances. By converting an input signal into short flashes of light, the optical fiber is able to carry complex information over distances of more than a hundred kilometers without additional amplification. This is at least five times better than the distances attainable using the best copper coaxial cables [6].

- *Cost saving*

Several miles of fiber optics cable can be made cheaper than equivalent lengths of copper wire. This saves the provider (cable TV, Internet) and money. Moreover, fiber-optic cable costs less to maintain than traditional copper lines, saving us all time and money.

- *Low cost*

Thin strands of glass, flexible enough to be coiled around a finger, and as inexpensive as copper wire, with no maintenance cost because the light-guiding index pro le is built right into the fiber structure [16]. Furthermore, the optical fiber resists most corrosive elements that attack copper cable.

VII. Inconveniences of Fiber Optics

Optical Fibers do not know many negative points.

- *Fragile components*

Optical fiber is a fragile material. Compared to copper, it requires more protection around the cable.

- *Damage Caused by Wildlife*

Many birds, for example, find the *Kevlar* reinforcement material of the optical cable cladding particularly attractive as a nesting material, so they peck the claddings to obtain the materials.

Moreover, Beavers and other rodents use exposed fiber optic cable to sharpen their teeth and insects like ants want plastic shielding in their power supply, so they are often found nibbling at fiber optic cabling.

Sharks have also been known to damage fiber optic cabling when placed underwater, especially at repetitive points. There is a plant called the Christmas Tree that treats the fiber optic cable as a root and wraps itself around the cable so strongly that the light pulses that pass through the fiber are smothered.

- *Affected by Chemicals*

Optical fibers can be affected by various chemicals, including hydrogen gas (a problem on submarine cable).

The connection of two optical fibers requires delicate polishing and perfect parallelism.

© 2021 Global Journals

- *Opacity*

It is known that most fibers become opaque when exposed to radiation. 11

VIII. Conclusion

As an engineering discipline, fiber optics is both fascinating and challenging [4]. The shortage of copper resources accelerated the widespread use of the optical fiber communications [18].

As the technology advances, optical fibers will no doubt find wider applications in various areas of research and engineering. The field still offers a number of interesting and challenging problems to the investigator [14].

At present, the optical fibers, an important and promising material, are the only practical waveguides for optical communications [18]. They have attracted more and more attention and extended their applications to various scientific and practical aspects [22]. Fiber-optic technology won't fade away [10], today fiber optics is either the dominant medium and logical choice for every communication system, and the future will see optical fibers technology improve exponentially.

In today's network, optical fiber cable becomes more popular than before and is widely used. In the long run, optical fiber will replace copper.

References Références Referencias

1. R.C. Alferness. Optical guided-wave devices. Science, *New Series,* 234(4778):825 829, 1986.
2. T.V. Andersen. *Applications of Nonlinear Optics and Optical Fibers.* Ph.D. Thesis, University of Aarhus, Denmark, 2006.
3. A.A. Aref'ev. Determination of the refractive index profile of gradient index materials. *Plenum Publishing Corporation, Translated from Izmeritel'naya Tekhnika,* pages 1082 1085, 1990.
4. M. Azadeh. Fiber *Optics Engineering.* Springer Science+Business Media, New York, 2009.
5. M. Bass and E.W. Van Stryland. *Fiber Optics Handbook: Fiber, Devices, and Systems for Optical Communications.* McGraw-Hill, U.S.A., 2002.
6. J. Crisp. *Introduction to Fiber Optics.* Newnes, Oxford, 2001.
7. I. Daftardar. Why are optical fibers better than copper wires for signal transmission? http://sciabc.us/tlWbd.
8. C.C. Davis. Fiber optic technology and its role in the information revolution. http://www.ece.umd.edu/~davis/optfib.html.
9. H.J.R. Dutton. *Understanding Optical Communications.* Prentice Hall, Upper Saddle River, New Jersey, U.S.A., 1998.
10. J. Hecht. *City of Light: The Story of Fiber Optics.* Oxford University Press, Oxford, 1999.
11. L. Ibbotson. *The Fundamentals of Signal Transmission: In Line, Waveguide, Fibre and Free Space.* Elsevier, Oxford, 1999.
12. F. Idachaba, D.U. Ike, and O. Hope. *Future Trends in Fiber Optics Communication.* Proceedings of the World Congress on Engineering, London, 2014. Vol. I.
13. M. Johnson. *Optical Fibers, Cables and Systems.* International Telecom munication Union-T Manual, 2009.
14. N.s. Kapany. Fiber optics. *Science, New Series,* 203(5): 72 81, 1960.
15. A. Méndez and T.F. Morse. *Specialty Optical Fibers Handbook.* Elsiever Inc., London, U.K., 2007.
16. F. Mitschke. *Fiber Optics: Physics and Technology.* Springer-Verlag, Berlin, 2009.
17. H. Murata. *Handbook of Optical Fibers and Cables.* Mc Graw-Hill, New York, 1996.
18. T. Okoshi. *Optical Fibers.* Academic Press Inc., New York, 1982.
19. J. Powers. *An Introduction to Fiber Optic Systems.* Mc Graw-Hill, New York, 1996.
20. D.K. Rao and J. J. Kaur. *Biology* 10. Ratna Sagar, Delhi, 2007.
21. B.E.A. Saleh and M.C. Teich. *Fundamentals of Photonics.* John Wiley & Sons Inc., New Jersey, U.S.A., 2007.
22. J.C. Schlesinger. *Optical Fibers Research Advances.* Nova Science Publishers, Inc., New York, 2008.
23. J.M. Senior and Yousif J.M. *Optical Fiber Communications Principles and Practice.* Pearson Education Limited, Edinburgh Gate, Harlow, Essex CM20 2JE, England, 2009.
24. N.R. Teja, M.A. Babu, T.R.S. Prasad, and T. Ravi. Different types of dispersions in an optical fiber. *International Journal of Scientific and Research Publications,* 2(12):1 5, 2012.
25. K. Thyagarajan and A. Ghatak. *Fiber Optic Essentials.* Wiley, New Jersey, U.S.A., 2007.
26. X.C. Tong. *Advanced Materials for Integrated Optical Waveguides.* Springer International Publishing, Switzerland, 2014.
27. L. Trasatti. Optical fibers and their applications. *Nuclear Instruments and Methods in Physics Research,* A279:354 358, 1989.
28. C. Yeh. *Handbook of Fiber Optics: Theory and Applications.* Academic Press, Inc., London, 1990.

© 2021 Global Journals

Global Journal of Science Frontier Research: a
Physics and Space Science
Volume 21 Issue 6 Version 1.0 Year 2021
Type: Double Blind Peer Reviewed International Research Journal
Publisher: Global Journals
Online ISSN: 2249-4626 & Print ISSN: 0975-5896

Time Dilation and Special Relativity

By Svanik Garg

Abstract- The presentation and defination of Time as a concept in the Theory Special Theory of Relativity is remarkably difference to that of Time in the Theory of Classical Mechanics. In Special Relativity, Time is considered as the fourth dimension in the fabric of space-time. However, the presentation of time as such, can be argued upon, as time can be defined as a method of defining events relative to one another. This paper provides an insight into Time Dilation details of its occurrence, and the controversial representation of time.

GJSFR-A Classification: *FOR Code: 02039p*



Strictly as per the compliance and regulations of:

© 2021. Svanik Garg. This research/review article is distributed under the terms of the Attribution-NonCommercial-NoDerivatives 4.0 International (CC BY-NC-ND 4.0). You must give appropriate credit to authors and reference this article if parts of the article are reproduced in any manner. Applicable licensing terms are at https://creativecommons.org/licenses/by-nc-nd/4.0/.

Time Dilation and Special Relativity

Svanik Garg

Abstract- The presentation and defination of Time as a concept in the Theory Special Theory of Relativity is remarkably difference to that of Time in the Theory of Classical Mechanics. In Special Relativity, Time is considered as the fourth dimension in the fabric of space-time. However, the presentation of time as such, can be argued upon, as time can be defined as a method of defining events relative to one another. This paper provides an insight into Time Dilation details of its occurrence, and the controversial representation of time.

I. Introduction

Albert Einstein mentioned in his Special Theory of Relativity that we exist in a 4 dimensional world, which has 3 space dimensions and a fourth dimension often called 'Spacetime'. The theory further explains that the motion of a reference frame (primary object) in the 'space' dimension reduces the passage through 'time' dimension which results in time progressing slower from the perspective of a reference frame, in motion.

However, this understanding of time and its dilation, Einstein presented, can be argued upon, given the structural flaws in the theory. Time can be comprehended to be a measure of duration of events, measured by the pace at which some activities happen". Eg- the vibration of an atom is an activity, and we measure time using this activity in an atomic clock.

II. Key Concepts

a) Time

'Time' can be described in simple terms to be a measure of motion with respect to frame of references. As said above, Time is just a measure of duration of events, measured by the pace at which some activities happen.

b) Theory of Special Relativity

Special relativity is an explanation of how speed affects mass, time and space, reflecting upon ideas such as time dilation, celeritas etc.

c) Time Dilation

A phenomenon, which exists due to the relativity between time and motion. It occurs, when under particular circumstances almost all activities slow down as the velocity of the specific frame of reference increase.

d) Frame of reference

An arbitrary position with reference to which the position or motion of something is described or physical laws are formulated.

III. Occurance Of Time Dilation

The passage of time, and resultant dilation exists, specifically in the following cases

1. When the frame of reference is motile, or constantly changing position
2. When a force acts upon the frame of reference.

a) Case 1 - When the frame of reference is motile

Time is measured by the rate at which some activities happen, these activities which help quantify the concept of time are always based on motion. In the case of atomic clocks we measure time by vibrations of a particular atomic particle. Vibration is a repeated motion, and thus it can be proportionally reduced by the linear motion of the entire frame of reference. Therefore, the Time we observe in a motile reference frame runs slower than Time measured in a stationary reference frame. The reason behind such an occurence is that, Time Dilation as a concept takes place when there is a relative motion between the fabric of space and the reference frame, specifically when they converge or diverge. This is quite rare however, as the fabric of space provides opposition to the motion or activity of the reference frame, meaning it can only take place at speeds upwards that of light, as explained by Stephen Hawking. However, gathering evidence for such an occurence of time dilation is nearly impossible with our current physical understanding. It is known that light travels at the speed of c, where c equals 299,792,458 m/s. The speed of light in vaccum is unknown to us, as any mass will be able to travel at any projectile velocity, however on the contrary it is impossible to cross the 'c' barrier for a given mass in our physical enviroment. That's because the fabric of space itself restricts light from travelling any faster than c, and the space-time fabric also restricts any massive body from travelling at the speed of light, making it physically impossible to cross the speed of light and test this specific occurence of Time Dilation.

This specific case of time dilation, contradicts Einstein's entire hypothesis pertaining to the movement of a projectile in reference to another which acts a frame of reference. If the projectile can move in light speeds, it means time is defined to be a dimension and not a measure of events, which theoretically should be incorrect. The equations of time dilation remain the

Author: The Doon School. e-mail: svanik.295.2024@doonschool.com

© 2021 Global Journals

same as that of Special theory of Relativity, as in both cases the equations are derived considering speed of light as the base value. It can be concluded that if, the space time fabric which supports the entire universe, itself prevents any matter from travelling at c or faster, the greatest speed possible should be said as 'Speed of light (c) with respect to the fabric of non-empty space(whose existence is debatable)'

Note: This case of Time Dilation by motion does not happen in absolute lack of matter/ vaccumm, however the existence of such a senario is impossible to judge, given the lack of knowledge we have pertaining to the theoretical existence of such a place without any matter or gravitational field.

b) Case 2 - When a linear force acts upon the frame of reference

This specific case can be defined using a simple analogy as outlined below: A particle is present on a spaceship, with a force acting on the spaceship and everything inside it. Then the clock inside spaceship ticks slower, in comparison to others. This happens due to the force, which is acting on the reference frame and all the matter in it, meaning the measure of time is altered completely. This case of Time Dilation is visibly seen if the force acting upon the object is strong enough to accelerate it to light speeds.

i. *Dilation in case of Inertial Forces*

Inertial force (sometimes called a pseudo force) is one such force that acts upon all . Like a gravitational force, when the inertial force acts on a particular object, it acts on every single component of matter in it inturn affecting, the time in that particular reference frame only. So, an inertial force acting upon this particular reference frame will always slow down the time (usually measured with a clock) inside one of the references frame. Centrifugal force is also another example of an inertial force, which acts in an identical manner and hence affects the time causing time dilation to take place

In order to test 'Time Dilation by Force (the second case)' as mentioned in this paper, it is possible to tie/attach any particular synchronized atomic clock to a wing of a rotating fan in the absence of any field such as a magnetic or gravitational field, as a centrifugal force will be acting upon all the matter present equally, creating a state where no external forces exist, suitable for Dilation to occur.

ii. *Specific Case*

a. *Opposite Forces*

A particular exception in the occurence of Time Dilation is when two different forces specifically act upon every specific particle inside the reference in absolute opposite direction, with the condition that, they cancel each other oout completely i.e resultant force has to be absolute zero. In such a situation, the factor by which Time slows down may not be always same, given the presence of two distinct forces as compared to the case when the resultant force is non-zero, and a single force acts upon the object as mentioned above. The time dilation factor in such a situation will also vary based on the resultant magnitude of these forces, however the principle of time dilation remains the same

b. *Freely fall*

When the frame of reference, through which time is measured, falls under the uniform acceleration of gravity, time dilation will neccesarily occur. However, in this case, Time Dilation will be very infinitesimal & negligible (very hard to measure), given the limited force due to the gravitational field, and the subsequent limited accelaration. In case of a black hole, where the field strength is considreably stronger, theoretically time dilation will exist in quantifiable terms.

IV. Limitations

1. It can be concluded that time dilation by motion, as mentioned in 3.1 will not happen in nothingness where there is NO force, and external factors at an absolute zero, which refers to the lack of mass or gravitational field or any other field or any other equivalent of mass, like antimatter. This is becuase, field has its own mass and a field like magnetic and gravity is a property of mass and not the emptiness, space itself. At this point of time, it is unknown whether such place exists in our known realm, however the existence of such space in our universe
2. In case 3.1 or time dilation, if the direction of unidirectional action is parallel to the direction of motion, the activity will rarely slow down.
3. In case of time dilation occuring due to a force, as described in 3.2, time slows down when the direction of force is contradcting the direction of the object itself. If the direction of force doesnt follow this property then the likelihood of time slowing down is very limited. This case of time dilation is unidirectional only ie ball will move in one direction ONLY, it is NOT a back and forth motion of the ball]. In the rare ocassion when there is a force on the medium itself (and on everything inside it, refer 3.2) in the direction of linear motion of the ball, then the ball would rarely ever slow down relative to an observer inside spaceship. However, any other activities inside the medium may slow down, given the same direction

V. Experiment To Test 'Time Dilation By Force'

a) Apparatus required

- synchronized atomic clocks

1. Rotating fan, with even mass to which one of the clocks can be attached.

© 2021 Global Journals

b) Methodology

Attach an atomic clock to the blade of fan and rotate the fan for exactly 2.5 minutes, the fan should rotate with a very high RPM upwards of 800 (rotations per minute). During this time period, the needle (locus arm) of the rotating clock (attached to fan's wing) will be as close to a perfect circle as possible and the faster the velocity of ciruclar rotation more will be the centrifugal force acting upon the relevant reference frame, the atomic clock in this specific case. The centrifugal force acting uniformly, will slow down the vibration inside of the atomic clock, which is attached to a fan. When this specific slowing down in vibration is accurately measured, the slowing down of clock and hence slowdown of time can be easily observed, reflecting upon the existence of time dilation.

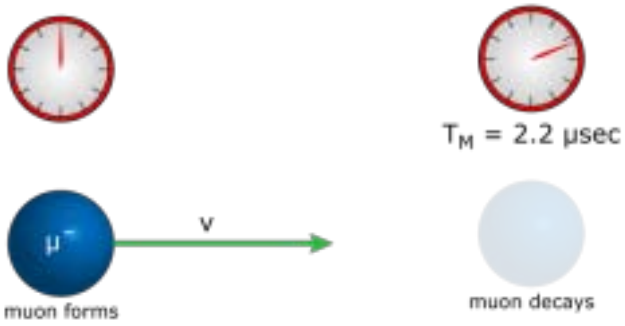

Fig. 1: Alternative method to test the hypothesis Radioactive Decay

c) Simulation

The experiment was simulated using the generic procedure, where a digital clock accurate to 20 decmial places, a GPS and an altimeter is used to potray an atomic clock. The clock used was Van online simulation of an atomic clock which follows the same procedure: https://wwv.mcodes. org. Using a CFD simulation of a rotating fan an existing experiment on time dilation was used, and the slowing down of time was observed on the software: CFD

d) Conclusion of the experiment

The known effect, as measured many times in history suggest that a force acting upon the entire reference frame does cause Time Dilation, aforementioned in Case 2 of Time dilation

e) Observations

1. A shorter wing when simulated for the fan results in a higher centrifugal force providing an even more accurate and notable outcome. In this case the time dilation by case 1 is much less likely as compared to time dilation by centrifugal force.
2. The experiment has to be done as a simulation, as for accurate results the effect of gravity should be negligible, and therefore doing it artificially is the most accurate option.
3. Gravitational Time dilation, which was described in Case 1, is a result of case 2, which is due to a force, not due to einsteins very explanation suggesting the bending of space-time, and paradoxical alterations to the fabric.
4. The Third case of Time Dilation (through a regular medium), not really discussed in this paper also contributes to dilation in the above simulation, however its effect is next to nothing given the presence of hypersimulated conditions in this experiment. Furthermore, this specific case of Time Dilation by Medium also affects all the reference frames of this experiment making it irrelavant in this specific experiment.

© 2021 Global Journals

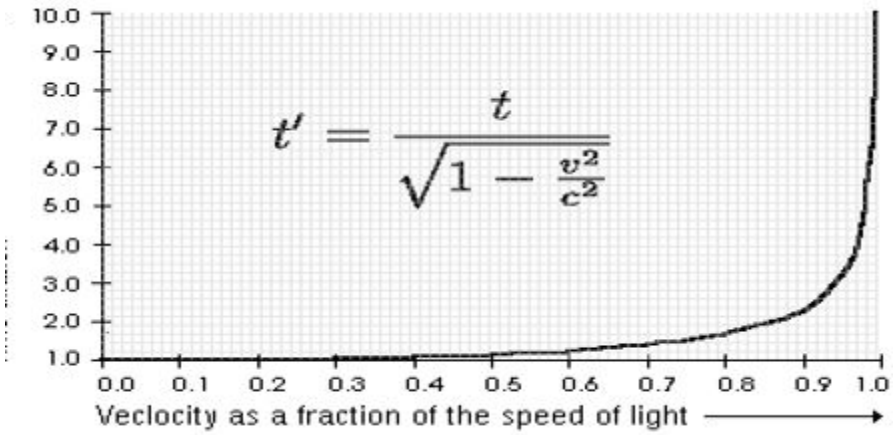

Fig. 3: Results obtained

VI. Findings

1. Time Dilation can occur as a result of 'Force'
2. Time is just a scalar measure of rate and longevity of events and can be simply measured by the rate at which some events take place. These actions can range from the vibrations of strings as part of the string theory, to the vibration of quarks and leptons to those of tangible atoms which consitute our matter. Therefore as defined by foreign entities is simply, 'slowing down of these activities under some circumstances relative to time'.
3. Due to the occurence of time dilation it can be understood, that time can be defined as an element of classical mechanics, contrary to that of einsteins' defination which stated that time is a seperate dimension.

VII. Contradictions

1. Einstein's Special theory of Relativity1 stated that, Time is a separate dimension. However, given this specific case of time dilation's existence it proves the hypothesis that, Time is just a measure of duration of events measured by the relative pace at which these actions take place, as if it existed in a seperate dimension its effect wouldnt be altered due to forces such as the centrifugal force in this case.
2. According to the special theory of relativity, Time Dilation is a result of movement in one of the space dimensions, relative to that the reference frame is present in or it is a result of the curvature or change in the space time fabric, however this experiment shows the contrary. It can be seen that time dilation is a result of a specific 'force' like in this experiment a centrifugal force acts upon on the reference frame and everything it contains.

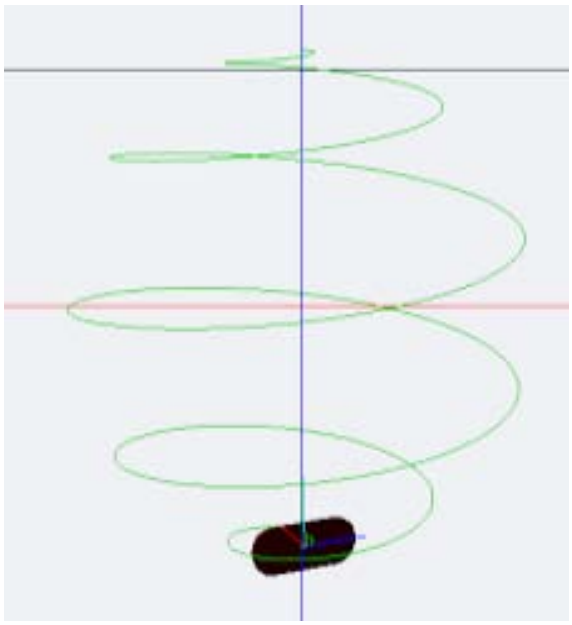

Fig. 4: Representation of time dilation in reference to eliptical movement

3. As per the third section of the Special theory of Relativity, Time Dilation can occur at all times where the reference frame is in motion, regardless of other external conditions except the enactment of a secondary force. However, as explained above, time dilation by motion, backed by classical mechanics, can be hypothesized to not happen in a state where matter ceases to exist and no field relays its effect. This is because the probability of the effect of time dilation on the specific particle or reference frame, is defined by matter, and therefore would become null and void otherwise.
4. Lastly, according to Special theory of Relativity1, Time shall always run in the polar opposite direction at a negative velocity much faster than that of light.

© 2021 Global Journals

However, Einstein also stated that it is impossible for any object to gain velocity that would exceed the limit of 'c' or rather be faster than the speed of light. However, it can be said that if speeds faster than light existed, time would not reverse itself, as time will move along at these speeds, given it is just a way of defining the rate at which events take place.

References Références Referencias

1. Einstein A., "Zur Elektrodynamik bewegter Körper" ("On the Electrodynamics of Moving Bodies"), Ann. Phys., 17, (1905).
2. James Clerk Maxwell. "A Dynamical Theory of the Electromagnetic Field," Phil. Trans. Royal Soc. 155 (1865).
3. http://www.ijsrp.org/research-paper-0914/ijsrp-p3334.pdf
4. IOPsciencehttps://iopscience.iop.org›article ›abce 02 › pdf
5. https://www.academia.edu/Documents/in/Time_ Dilation
6. https://arxiv.org/abs/1707.00171
7. https://www.researchgate.net/publication/320567641_Is_Time_Dilation_a_ scientific_theory
8. https://www.ijser.org/researchpaper/The Scientific-Conceptualization-of-Time-dilation.pdf
9. https://philpapers.org/rec/DIKDOG
10. https://www.sryahwapublications.com/open-access-journal-of-physics/pdf/v4-i2/4.pdf
11. http://www.journalcra.com/article/length-contraction-time-dilation-gravity-total-existence-universe-and-beyond
12. https://arcticstardesign.com/2018/11/28/frames-of-reference/
13. https://www.science.org/doi/10.1126/sciadv.aax8966
14. https://www.sciencedaily.com/releases/2020/10/201023082010.htm
15. https://www.vedantu.com/physics/time dilation

© 2021 Global Journals

Global Journal of Science Frontier Research (A) Volume XXI Issue VI Version I Year 2021
26

This page is intentionally left blank

© 2021 Global Journals

Global Journal of Science Frontier Research: a Physics and Space Science
Volume 21 Issue 6 Version 1.0 Year 2021
Type: Double Blind Peer Reviewed International Research Journal
Publisher: Global Journals
Online ISSN: 2249-4626 & Print ISSN: 0975-5896

Dark Matter and Real-Particle Field Theory

By Zhong-Cheng Liang

Nanjing University of Posts and Telecommunications

Abstract- Based on real-particle field theory, this research demonstrates that dark matter comprises elastic electrons with a full cosmic background. In the real-particle field theory, real particles are elastic particles with both mass and volume. Real particles have three independent motion modes and two symmetrical interactions. The evolution of the real-particle field follows a set of Poisson equations. The theory shows that the electric and magnetic potentials represent electronic interactions of mass attraction and motion repulsion. The electromagnetic and dark-matter fields are essentially elastic electron fields. The laws of mechanics, gravitation, and electromagnetism of classical physics can be inferred from the real-particle field theory. In the electron field, electronic clusters are photons with the energy proportional to vibration frequency. The mechanic features of photons can be characterized by their volume, mass, and elasticity. Furthermore, the radiation of electronic clusters follows Planck's law, which indicates that dark matter has a uniform density and no photonic current in the cosmic background. It is shown that matter essentially comprises discrete particles, and the matter field is merely a statistical convolution effect of a large number of particles. Consequently, dark matter particles contribute to the structural formation of all matter in the universe.

Keywords: *dark matter, elastic particles, photons, interactions, unified field.*

GJSFR-A Classification: *FOR Code: 020199*



Strictly as per the compliance and regulations of:

© 2021. Zhong-Cheng Liang. This research/review article is distributed under the terms of the Attribution-NonCommercial-NoDerivatives 4.0 International (CC BY-NC-ND 4.0). You must give appropriate credit to authors and reference this article if parts of the article are reproduced in any manner. Applicable licensing terms are at https://creativecommons.org/licenses/by-nc-nd/4.0/.

Dark Matter and Real-Particle Field Theory

Zhong-Cheng Liang

Abstract- Based on real-particle field theory, this research demonstrates that dark matter comprises elastic electrons with a full cosmic background. In the real-particle field theory, real particles are elastic particles with both mass and volume. Real particles have three independent motion modes and two symmetrical interactions. The evolution of the real-particle field follows a set of Poisson equations. The theory shows that the electric and magnetic potentials represent electronic interactions of mass attraction and motion repulsion. The electromagnetic and dark-matter fields are essentially elastic electron fields. The laws of mechanics, gravitation, and electromagnetism of classical physics can be inferred from the real-particle field theory. In the electron field, electronic clusters are photons with the energy proportional to vibration frequency. The mechanic features of photons can be characterized by their volume, mass, and elasticity. Furthermore, the radiation of electronic clusters follows Planck's law, which indicates that dark matter has a uniform density and no photonic current in the cosmic background. It is shown that matter essentially comprises discrete particles, and the matter field is merely a statistical convolution effect of a large number of particles. Consequently, dark matter particles contribute to the structural formation of all matter in the universe.

Keywords: dark matter, elastic particles, photons, interactions, unified field.

I. Introduction

Modern astrophysical and cosmological observations have shown that the motion of galaxies deviates significantly from the predictions of the Newtonian and Einsteinian gravitation theories. Therefore, it is necessary to hypothesize the existence of invisible dark matter in the universe, which can compensate for the gravitational effects of galactic motion [1–5]. It has been estimated that only approximately five percent of the universe is visible "bright matter," while the rest is dark matter and dark energy, which are invisible and intangible (called dark phenomenon) [2]. Since the dark matter hypothesis was suggested, dark matter has been investigated based on various theories [3, 4]. However, because dark matter is considered to interact only gravitationally and not via electromagnetic fields, it is difficult to detect. So far, despite the deployment of expensive equipment to detect dark matter, no reliable observational evidence has been provided. The null result of observations raises questions regarding the existence of dark matter—with gravity but no electrical effect—and the reliability and completeness of the current gravitation theory, including Newtonian gravitational theory and Einsteinian general relativity. Some researchers insist that dark phenomenon can be explained by modifying the current theory without assuming the existence of dark matter [5, 6]. However, most researchers support the existence of a hypothetical dark matter. In terms of extending the current gravitational theory, the research trend is to combine relativity and quantum theories to develop a unified field theory [1, 2, 5].

In axiomatic set theory, reliability means that a logical system is self-consistent and there is no contradiction; completeness means that all propositions in the logical system can be proved or falsified. The Newtonian gravitational theory is a limit-case approximation of general relativity for a low speed and weak field. The planets in the solar system follow the inverse-square law of gravitation. However, at the galactic scale, galactic rotation deviates from the prediction of Newton's gravitational theory, whereas general relativity can predict the rotation curves under appropriate conditions. At the scale of galaxy clusters, we have to move beyond Newtonian physics and use a relativistic theory and sometimes also a quantum theory. At the cosmological scale, researchers have focused on developing quantum gravity theories, such as the super-string theories. Nevertheless, the gravitational theory remains an inconsistent and incomplete logical system, although the theory has become profound and difficult to understand. This casts doubt on whether gravitation is really that complicated and whether a more reasonable logical framework exists. To address these concerns, we need to scrutinize current physics theories at their foundation.

The core concepts of physics include matter, particles, space, time, motion, energy, and interaction. The differences among the core concepts constitute the basis for the classification of different theoretical systems. Recently, real physics theory, which differs from classical and modern physics, was proposed based on the principle of objectivity. Real physics includes the motion state theory [7–10], statistical thermodynamics [7, 8, 11], and real-particle field theory [7, 8, 12, 13], which is a unified theory of gravitational and electromagnetic inter actions. Table I summarizes the core concepts of these three physics theories, where the concepts of real physics are proposed as physical axioms.

Real physics and modern physics theories differ in two aspects. First, unlike modern physics where

Author: College of Electronic and Optical Engineering & College of Microelectronics, Nanjing University of Posts and Telecommunications. Nanjing 210046, China. e-mail: zcliang@njupt.edu.cn

© 2021 Global Journals

matter is a continuous field, in real physics, matter is composed of discrete particles. Second, in real physics, space and time are independent of each other. The former proposition is of decisive significance for eliminating the opposition between general relativity and quantum theory [14]. The latter proposition eliminates relativity-induced conceptual confusion, such as between space and time, mass and energy, and matter and spacetime [2]. However, these two propositions are completely consistent with classical mechanics.

Table I: Core concepts of three physics theories

	Classical physics	Modern physics	Real physics
Matter	Discrete particle	Continuous field	Discrete particle
Particle	Point-like geometry, mass conservation, zero volume	Wave-like exciton, mass non-conservation, indefinite volume	Body-like elastomer, mass conservation, finite volume
Space	Absolute-empty, 3-dimensional space	Energy-suffused, 4-dimensional spacetime	Particle-filled, 3-dimensional space
Time	Math reversible	Math reversible	Math irreversible
Motion	Translation mode	Vibration mode	Translation mode, vibration mode, rotation mode
Energy	Motion attribute	Matter attribute	Motion attribute
Interaction	Gravitational force, electromagnetic force	Gravitational force, electromagnetic force, weak force, strong force	Mass attraction, motion repulsion

There are three main differences between real physics and classical physics theories. First, the absolute empty space described by Newton is modified to a real space filled with particles. Second, Newtonian point-like particles are modified to elastic real particles. Third, motion repulsion is added to Newtonian gravitational theory. The first correction considers the existence of dark matter between stars. The second correction helps deter mine the species of dark matter particles. The third correction unifies gravitational and electromagnetic inter actions. This paper introduces real-particle theory and presents analyses of the properties of the real-particle and dark matter fields.

II. Real-Particle Theory

a) Theoretical model

Real physics establishes physical axioms and basic principles and involves the conversion of physical concepts into mathematical forms.

i. Real quantity

In real physics, the real quantity, q, refers to the phys ical quantity defined in terms of real numbers in the fol lowing form

$$\boldsymbol{q} = q_s \cdot \tilde{\boldsymbol{q}}; \quad (|\boldsymbol{q}| < \infty,\ 0 < q_s < \infty \tag{1}$$

where q_s is a scale factor, and $\tilde{\boldsymbol{q}}$ is a digit factor. Scales are the measures and identifiers of physical quantities and are uniform in space. The significance of introducing real quantities is to provide a new quantitative method for physics theories. In Section II B, it is demonstrated that the essence of scale is quantum, and their semantics are equivalent.

ii. Real space

Real space is a three-dimensional Euclidean space full of particles. The position in real space is represented by the position vector as

$$\boldsymbol{r} = r_s \cdot \tilde{\boldsymbol{r}} = \overrightarrow{OP} = (x, y, z); \quad \tilde{\boldsymbol{r}} = (\tilde{x}, \tilde{y}, \tilde{z}). \tag{2}$$

The scale r_s is called a space quantum and the digit $\tilde{\boldsymbol{r}}$ is a digital vector. The volume quantum $V_s = r^3_s$ is called a space cell and has a uniform size in space. Space cells must contain particles, i.e., the particle density in real space is non-zero.

A set of particles in a space cell is called a cluster and reflects the entity of a quantum that contains more than one particle. For example, the atom is a cluster containing a nucleus and electrons, and the solar system is a cluster containing the sun and planets.

In a Cartesian coordinate system with reference origin O (space origin) and space coordinates (x, y, z), the position vector depends on the origin (origin-relevant), whereas the space quantum does not (origin-irrelevant).

iii. Real time

Real time is independent of real space and is defined as

$$t = t_s \cdot \tilde{t}; \quad \tilde{t} = 0, 1, 2, 3, \cdots . \tag{3}$$

The scale t_s is called a time quantum. The digit $\tilde{t}$ is a sequence of natural numbers, indicating the

© 2021 Global Journals

uniformity and irreversibility of real time. $\tilde{t} = 0$ is the reference origin of real time (time origin) and is determined by a synchronization protocol. The protocol stipulates that when a signal is generated at a space origin O at t_0 and propagates at a communication speed c, the time at any position $P(r)$ is set to $t = t_0 + r/c$. For example, if Greenwich is taken as the origin and the speed of light as the communication speed, the synchronization of the global time can be established by radio waves. The signal speed used for time synchronization is a system constant, rather than a universal constant. Both the speeds of light and sound can be employed as the signal speed.

iv. *Real particle*

Real particles are three-dimensional elastic objects. Elastic objects have both mass and volume and thus can spin and undergo elastic deformation. Electrons, pro tons, and atoms are all elastic particles. The mass of elastic particles is conserved, but their volume, density, and shape are variable. Real physics does not consider particles without mass or volume, and hence, there are only two kinds of primitive real particles in nature: pro tons and electrons. Their masses are the same as those of protons and electrons in modern physics, but they have no electric charge. The concept of charge is unnecessary in real physics. Apart from protons, the particles that fill the universe can only be electrons. Ubiquitous electrons are the so-called dark matter particles.

v. *Matter*

Matter in nature is solely composed of discrete elastic particles. Mathematical analysis shows that the field is not an independent form of matter, but rather a statistical convolution effect composed of a large number of particles. The field theory of real particles suggests that the ubiquitous electronic gas forms an ocean of dark matter in the universe, and the space in which protons gather forms islands of "bright matter."

vi. *Motion*

The spatial state of a real particle includes its position, profile, and posture, which are characterized by the position vector $r_c = (x_c, y_c, z_c)$ of the center of mass, the eigenvalues $I_c = (I_{c1}, I_{c2}, I_{c3})$ of the rotary inertia matrix, and the eigenvector directions $\boldsymbol{\theta}_c = (\boldsymbol{\theta}_{c1}, \boldsymbol{\theta}_{c2}, \boldsymbol{\theta}_{c3})$ of the rotary inertia matrix, respectively. Real particles have three independent motion modes of translation, rotation, and vibration, corresponding to the temporal variations of position, posture, and profile, respectively. Each motion mode has three degrees of freedom, and a real particle has nine degrees of freedom of motion. The rotation mode refers to the particle spin. The vibration mode refers to the elastic oscillation in which the particle returns to its original shape after deformation. The superposition of translation and vibration modes is the cause of wave-particle duality. The motion of real particles encompasses the translation mode of point-like particles in classical physics and the vibration mode of wave-like particles in modern physics. As an entity of quantum physics, clusters are real particles that comprise three independent motion modes.

vii. *Energy*

If a particle has a vibration energy, $H_{i\alpha}$, rotation energy, $L_{i\alpha}$, and translation energy, $K_{i\alpha}$, then the total motion energies for an N-particle system are

$$H = \sum_{i=1}^{N}\sum_{\alpha=1}^{3} H_{i\alpha} > 0,$$

$$L = \sum_{i=1}^{N}\sum_{\alpha=1}^{3} L_{i\alpha} > 0, \tag{4}$$

$$K = \sum_{i=1}^{N}\sum_{\alpha=1}^{3} K_{i\alpha} > 0.$$

According to the motion energies, particle systems are classified as vibration (radiative) system ($H > L$ and $H > K$), rotation (magnetic) system ($L > K$ and $L > H$), and translation (thermal) system ($K > H$ and $K > L$). A system with a constant proportion ($H : L : K$) is in a state of equilibrium, and an atomic system in equilibrium is also called a stationary state. In real physics, other forms of energy can be derived from motion energy [11]. In a translation system, for exam ple, the potential energy $J = H - K$, thermal energy $Q = L+K$, chemical energy $G = L-H$, and internal en ergy $U = K+L-H$ can be derived. Specifically, H equals the mechanical energy, and $-H$ equals the Helmholtz free energy. Energy is essentially attributed to motion, and not directly to matter. The mass of real particles is con served, and mass and energy cannot be converted into one another.

viii. *Interaction*

The interaction between real particles includes mass attraction and motion repulsion. Mass attraction represents the aggregation tendency of particles, and motion repulsion indicates the existence of gaps between particles necessary for motion. The mathematical constraint of motion repulsion is that the intervals between different particles are greater than zero, i.e., $r_{ij} = (r_{ij} \cdot r_{ij})^{1/2} > 0$. The direct inference of motion repulsion is that the mass density of any object is finite, namely, $\rho = M/V < \infty$. In the field theory of real particles, mass potential rep resents mass attraction and momentum potential represents motion repulsion. Analysis shows that the forms of interaction include the gradient (gravitation and electrostatic), curl (magnetic), and divergence (alternating electromagnetic) forces, which correspond to the translation, rotation, and vibration forces, respectively. The weak and strong

© 2021 Global Journals

forces originate from the combined effects of the gradient, curl, and divergence forces.

b) Scale systems

In real physics, quantization is the procedure of ex pressing physical quantities in terms of real quantities and determining their scale relations. There are only three independent scales (basic quanta) in the three dimensional real space. Different physics theories adopt different basic quanta.

i. *Scales of classical mechanics*

In classical mechanics, the basic quanta are the space scale r_s, time scale t_s, and mass scale M_s. Other scales can be expressed as functions of the basic quanta, e.g.

$$u_s = r_s/t_s, \qquad \omega_s = 1/t_s,$$

$$p_s = M_s(r_s/t_s), \quad I_s = M_s r_s^2. \tag{5}$$

In Eq. (5), u_s is the velocity scale, $\boldsymbol{\omega}_s$ is the angular velocity scale, p_s is the momentum scale, and I_s is the rotary inertia scale. The basic quanta $\{r_s, t_s, M_s\}$ stand for the basic physical dimensions of length, time, and mass in classical mechanics.

ii. *Scales of motion energy*

In real physics, H, L, and K are three independent motion energies. The corresponding energy scales are the vibration quantum H_s, rotation quantum L_s, and translation quantum K_s.

$$H_s = H/N = Y_s V_s = hv,$$

$$L_s = L/N = I_s\omega_s^2 = lB,$$

$$K_s = K/N = M_s u_s^2 = kT. \tag{6}$$

In Eq. (6), Y_s is the elastic modulus scale; h, l, and k are the Planck, Bohr magneton, and Boltzmann constants, respectively; and v, B, and T are the vibration frequency, magnetic induction, and absolute temperature, respectively. The energy quanta, H_s, L_s, and K_s, apply to the vibration, rotation, and translation systems, respectively. In equilibrium state, the energy digits $(\tilde{H}, \tilde{L}, \tilde{K})$ take in teger values. The stationary states of an atom can be easily determined for predicting the corresponding emission spectrum [10].

iii. *Scales of real-particle field*

In the real-particle field theory, the basic quanta are the mass scale M_s, time scale t_s, and velocity scale $u_s = c$ (communication speed). Some scales of the field include

$$r_s = ct_s = \lambda, \qquad v = 1/t_s, \qquad p_s = M_s c,$$

$$V_s = r_s^3 = \lambda^3, \quad \rho_s = M_s/\lambda^3, \quad j_s = p_s/\lambda^3. \tag{7}$$

In Eq. (7), $\boldsymbol{\lambda}$ is the wavelength, v is the frequency, and $\boldsymbol{\rho}_s$ and j_s are the scales of the mass and momentum den sities, respectively. In the real-particle field, the vibration quantum $H_s = hv$ corresponds to the Planck energy, and the translation quantum $K_s = M_s c^2$corresponds to the Einstein energy. The scale relations of quantum me chanics depicted in Eq. (8) are valid under the special condition $H_s = K_s = E_s$.

$$M_s = h/(\lambda c), \quad p_s = h/\lambda, \quad h = r_s p_s = E_s t_s. \tag{8}$$

c) Objectivity principle

The objectivity principle claims that the laws of matter and motion are objective and do not depend on the subjective consciousness of the observer; therefore, human subjective factors must be excluded from the physical formulation.

Physical processes are objective, but physical observations are subjective. For physical observations, measurement units and a reference system must be chosen, both of which are subjective factors. The objectivity principle requires that physical formulas have scale covariance and origin irrelevance.

i. *Scale covariance*

The scale covariance ensures that the digital relation has the same form as the physical relation, i.e.

$$z = f(x, y) = z_s \cdot \tilde{z}; \quad z_s = f_s, \ \tilde{z} = f(\tilde{x}, \tilde{y}), \tag{9}$$

where f represents the physical relationship among quantities $\{x, y, z\}$. The formula $z_s = f_s$ is called scale co variance, and the formula $\tilde{}z = f(\tilde{}x, y\tilde{})$ is called digit independence. The operation rules of real quantities can be determined according to Eq. (9).

a. *Addition and subtraction*

$$z = x \pm y = x_s \cdot (\tilde{x} \pm \tilde{y}); \ x_s = y_s = z_s, \ \tilde{z} = \tilde{x} \pm \tilde{y}. \tag{10}$$

b. *Multiplication*

$$z = xy = (x_s y_s) \cdot (\tilde{x}\tilde{y}); \quad z_s = x_s y_s, \ \tilde{z} = \tilde{x}\tilde{y}. \tag{11}$$

c. *Division*

$$z = \frac{y}{x} = \frac{y_s}{x_s} \cdot \frac{\tilde{y}}{\tilde{x}}; \quad z_s = \frac{y_s}{x_s}, \ \tilde{z} = \frac{\tilde{y}}{\tilde{x}}. \tag{12}$$

d. *Real differential*

$$z = f(x), \ \ x_i = x_0 + i \cdot x_s, \ \ i = 0, 1, 2, \cdots, n;$$

$$\mathrm{d}z = f(x_{i+1}) - f(x_i) = f_s \cdot [f(\tilde{x}_{i+1}) - f(\tilde{x}_i)];$$

$$\mathrm{d}\tilde{z} = f(\tilde{x}_{i+1}) - f(\tilde{x}_i), \quad z_s = f_s. \tag{13}$$

© 2021 Global Journals

e. *Real derivative*

$$\frac{\mathrm{d}z}{\mathrm{d}x}=\frac{z_s}{x_s}\cdot\mathrm{d}\tilde{z};\quad \left(\frac{\mathrm{d}z}{\mathrm{d}x}\right)_s=\frac{z_s}{x_s},\ \frac{\mathrm{d}\tilde{z}}{\mathrm{d}\tilde{x}}=\mathrm{d}\tilde{z}. \quad (14)$$

f. *Real integral* $^{\mathrm{d}}z\,dx$

$$S(x_0,x_n)=\int_{x_0}^{x_n}f(x)\,\mathrm{d}x=(x_sf_s)\cdot\sum_{i=1}^{n}f(\tilde{x}_i);$$

$$S_s=x_sf_s,\quad \tilde{S}=\sum_{i=1}^{n}f(\tilde{x}_i). \quad (15)$$

g. *Digit operation*

Digit operations contain exponential, logarithmic, and trigonometric functions, which can be regarded as the case of $x_s=1$, e.g.

$$\begin{aligned}\mathrm{e}^x&=\mathrm{e}^{x_s\cdot\tilde{x}}=\mathrm{e}^{\tilde{x}},\\ \ln x&=\ln(x_s\cdot\tilde{x})=\ln\tilde{x},\\ \sin x&=\sin(x_s\cdot\tilde{x})=\sin\tilde{x}.\end{aligned} \quad (16)$$

ii. *Origin irrelevance*

Origin irrelevance requires that the definition of physical quantity be independent of the reference origins in time and space. Therefore, the physical quantity must be defined at any time ($\tilde{t}=k$). The position vector of particles $\boldsymbol{r}_i(k)$ can only appear in the form of intervals, $\boldsymbol{r}_{ij}(k)$, and displacements, $\mathrm{d}\boldsymbol{r}_i(k)$, to eliminate the influence of the space origin, as proved in Eq. (17).

$$\begin{aligned}\boldsymbol{r}_{ij}(k)&=\boldsymbol{r}_j(k)-\boldsymbol{r}_i(k)=\overrightarrow{OP_j(k)}-\overrightarrow{OP_i(k)}\\ &=\overrightarrow{P_i(k)P_j(k)},\quad (i\neq j)\\ \mathrm{d}\boldsymbol{r}_i(k)&=\boldsymbol{r}_i(k+1)-\boldsymbol{r}_i(k)=\overrightarrow{OP_i(k+1)}-\overrightarrow{OP_i(k)}\\ &=\overrightarrow{P_i(k)P_i(k+1)}.\end{aligned} \quad (16)$$

The particle velocity is defined as displacement divided by time quantum

$$\boldsymbol{u}_i(k)=\frac{\mathrm{d}\boldsymbol{r}_i(k)}{\mathrm{d}t}=\frac{r_s}{t_s}\cdot\mathrm{d}\tilde{\boldsymbol{r}}_i(k);$$

$$u_s=r_s/t_s,\quad \tilde{\boldsymbol{u}}_i(k)=\mathrm{d}\tilde{\boldsymbol{r}}_i(k). \quad (18)$$

The displacement velocity thus defined is independent of the space and time reference origins.

iii. *Principle of unity*

Scale covariance indicates that physical laws apply to any scale range of physical quantities. All particles follow the same equations of motion in both the classical and quantum worlds, under slow and fast motion, and at low and high energies. Origin irrelevance indicates that the physical laws apply to any time and space, independent of the choice of the reference system. The principle of objectivity, which combines the concepts of relativity and quantum theories, is a principle of unity and universality.

The observation of motion prerequisites the selection of a coordinate system, which is based on two subjective factors: the reference origin and coordinate unit. In Newtonian mechanics, the instantaneous velocity $(d\boldsymbol{r}_i/dt)$ is a classical derivative related to the reference origin. Therefore, the inertia law is a cornerstone of Newtonian mechanics, and the motion law of Newton directly depends on the reference system. The relativity principle demands that the law of motion be independent of the choice of coordinate system, and therefore, its mathematical structure should be invariant (or covariant) under a coordinate (or metric) transform. Similar to the objectivity principle, the relativity principle serves to eliminate the subjectivity of the coordinate system.

According to real physics, the essence of quantum is scale, and the entity of quantum is cluster. The state function of quantum mechanics (ψ) describes the motion of clusters, rather than individual particles. The cluster motion is determined by the momentum (translation), angular momentum (rotation), and Hamiltonian (vibration) operators. The quantum eigen-states belong to the sub-modes of a certain motion operator, and the state superposition results in a hybrid motion mode. The modulus square of the state function ($|\psi|^2$) represents the probability of the motion mode. In real-particle field theory, the motion of clusters also needs statistical description. However, the statistical function is not a probability but the distribution of mass and momentum densities. The translation, rotation, and vibration of clusters are described by the gradient, curl, and divergence, respectively. The starting point of quantum mechanics is the quantization of energy, whereas the basis of real physics is the quantization of all physical quantities. Scale covariance indicates that real physics is a full-scale theory, and objectivity principle is the ultimate criterion of unifying physics theory.

d) Real-particle field

The real-particle field describes the motion of elastic particles in real space. Based on the mass and momentum statistics of particles, we derived a complete set of field equations and inferred the classical laws of mechanics, gravitation, and electromagnetism from the real particle field theory.

i. *Density field*

Consider a finite field space of volume *V*, free boundary *S*, and particle number *N*. The field space is

© 2021 Global Journals

divided by the volume quantum into $\tilde{V}$ space cells; a field with volume $V = V_s \cdot \tilde{V}$ has a total of $\tilde{V}$ clusters. The mass distribution of clusters constitutes a field of mass density $\rho(r, t)$, and the momentum distribution of clusters constitutes a field of momentum density $\boldsymbol{j}(\boldsymbol{r}, t)$. ρ and $\boldsymbol{j}$ are collectively called the density field. The mass and momentum of a cluster are the sums of the mass and momentum, respectively, of particles in the space cell; thus, the density field is essentially the statistical result of discrete particles.

ii. *Potential field*

The potential field is constructed from the density field through an integral transform named the confined space convolution. As defined in Eqs. (19) and (20), the mass potential $\Phi(\boldsymbol{r}, t)$ is the space convolution of mass density, which represents the mass attraction between clusters. The momentum potential $\boldsymbol{A}(\boldsymbol{r}, t)$ is the space convolution of momentum density, which represents the motion repulsion between clusters. The opposite signs of Φ and A reflect the opposite interactions of attraction and repulsion.

$$\Phi(\boldsymbol{r},t) = \frac{-1}{\varphi}\left[\rho(\boldsymbol{r},t) \circledast \left(\frac{1}{|\boldsymbol{r}|}\right)\right] = \frac{-1}{\varphi}\int_V \frac{\rho(\boldsymbol{r}',t)}{|\boldsymbol{r}-\boldsymbol{r}'|}\,\mathrm{d}V' = \frac{-1}{4\pi\varphi_s}\int_V \frac{\rho(\boldsymbol{r}',t)}{r}\,\mathrm{d}V'; \quad \Phi_s = \frac{\rho_s V_s}{\varphi_s r_s} = c^2.$$

$$\boldsymbol{A}(\boldsymbol{r},t) = \alpha\left[\boldsymbol{j}(\boldsymbol{r},t) \circledast \left(\frac{1}{|\boldsymbol{r}|}\right)\right] = \alpha\int_V \frac{\boldsymbol{j}(\boldsymbol{r}',t)}{|\boldsymbol{r}-\boldsymbol{r}'|}\,\mathrm{d}V' = \frac{\alpha_s}{4\pi}\int_V \frac{\boldsymbol{j}(\boldsymbol{r}',t)}{r}\,\mathrm{d}V'; \qquad A_s = \frac{\alpha_s j_s V_s}{r_s} = c. \tag{20}$$

In Eqs. (19) and (20), $\circledast$ is the operator of confined space convolution, $r = |\boldsymbol{r} - \boldsymbol{r}'|$ is the distance between clusters, and the minimum distance is r_s (i.e., $\tilde{r} = 1$). The potentials are finite because $\tilde{r} \geq 1$ and $\tilde{V} < \infty$. Φ is a scalar potential with the same form as the gravitational and electric (retarded) potentials, and A is a vector potential with the same form as the magnetic (retarded) potential [15, 16].

The medium coefficient, $\varphi = 4\pi\varphi_s$, and the dynamics coefficient, $\alpha = \alpha_s/4\pi$, are not constants but satisfy the constraint

$$\alpha\varphi = \alpha_s\varphi_s = c^{-2}. \tag{23}$$

The constraint indicates that a smaller φ corresponds to larger α, that is, the two potentials are directly proportional to each other. In this way, the balance of attraction and repulsion is independent of the values of φ and α.

A convolution operation applies a smoothing effect to an input function [17], which can transform a rough density field into a smooth potential field. Therefore, classical vector calculus can be applied on the potential field to obtain the motion equation of the particle field.

iii. *Field constraints*

The constraints on the real-particle field include the continuity, conservation, and boundary conditions.

a. *Continuity theorem*

If $\boldsymbol{z}(\boldsymbol{r}, t)$ is the bulk density of any physical quantity $\boldsymbol{Z}(t)$, then

$$\boldsymbol{Z}(t) = \int_V \boldsymbol{z}(\boldsymbol{r}', t)\,\mathrm{d}V'. \tag{22}$$

The time derivative of Z(t) can be expressed as

$$\frac{\mathrm{d}\boldsymbol{Z}}{\mathrm{d}t} = \frac{\mathrm{d}}{\mathrm{d}t}\left[\int_V \boldsymbol{z}(\boldsymbol{r}', t)\,\mathrm{d}V'\right] \equiv \int_V \frac{D\boldsymbol{z}}{Dt}\,\mathrm{d}V'. \tag{23}$$

Here, $D\boldsymbol{z}/Dt$ is the motion derivative of $\boldsymbol{z}$, which can be derived as (see Appendix A)

$$\frac{D\boldsymbol{z}}{Dt} = \frac{\partial \boldsymbol{z}}{\partial t} + \nabla\cdot(\boldsymbol{z}\boldsymbol{u}), \tag{24}$$

where $\boldsymbol{u}$ is the cluster velocity, and $\boldsymbol{z}\boldsymbol{u}$ is the dyad of $\boldsymbol{z}$ and $\boldsymbol{u}$. The term $\partial z/\partial t$ originates from a density variation, whereas the term $\nabla\cdot(\boldsymbol{z}\boldsymbol{u})$ originates from a volume variation. Eq. (24) is known as the continuity theorem.

b. *Conservation theorem*

If the total amount of $\boldsymbol{Z}$ is time invariant, i.e., $\boldsymbol{Z}/\mathrm{d}t = 0$, then

$$\frac{D\boldsymbol{z}}{Dt} = \frac{\partial \boldsymbol{z}}{\partial t} + \nabla\cdot(\boldsymbol{z}\boldsymbol{u}) = 0. \tag{25}$$

This equation is known as the conservation theorem.

c. *Boundary condition*

The mass of a real-particle field is conserved, and the conservation equation is

$$\frac{D\rho}{Dt} = \frac{\partial \rho}{\partial t} + \nabla\cdot(\rho\boldsymbol{u}) = \frac{\partial \rho}{\partial t} + \nabla\cdot\boldsymbol{j} = 0. \tag{26}$$

Eq. (26) is equivalent to the free boundary condition of the density field in the form

© 2021 Global Journals

$$\oint_S \boldsymbol{j}(\boldsymbol{r}',t)\cdot \mathrm{d}\boldsymbol{S}' = -\int_V \frac{\partial \rho(\boldsymbol{r}',t)}{\partial t}\,\mathrm{d}V'. \tag{27}$$

This condition implies the prohibition of matter exchange between the system and its surroundings.

The boundary condition of the potential field imposes another constraint

$$\frac{\alpha_s}{4\pi}\oint_S \frac{\boldsymbol{j}(\boldsymbol{r}',t)\cdot \mathrm{d}\boldsymbol{S}'}{r} = D_0(t). \tag{28}$$

This condition implies the permission of exchange of vibration energy between the system and its surroundings.

iv. *Action field*

The action field is the spatial first derivative of the potential field. The action field includes the gradient field *G*, curl field *C*, and divergence field *D* (see Appendix B).

$$\boldsymbol{G}(\boldsymbol{r},t) = -\nabla\Phi = \frac{-1}{\varphi}\int_V \frac{\rho(\boldsymbol{r}',t)\boldsymbol{r}}{r^3}\,\mathrm{d}V'; \tag{30}$$

$$G_s = \frac{r_s}{t_s^2}.$$

$$\boldsymbol{C}(\boldsymbol{r},t) = \nabla\times\boldsymbol{A} = \alpha\int_V \frac{\boldsymbol{j}(\boldsymbol{r}',t)\times\boldsymbol{r}}{r^3}\,\mathrm{d}V';$$

$$C_s = \frac{1}{t_s}.$$

$$D(\boldsymbol{r},t) = \nabla\cdot\boldsymbol{A} = \frac{1}{c^2}\frac{\partial\Phi}{\partial t} - D_0(t);$$

$$D_s = \frac{1}{t_s}. \tag{31}$$

G has the scale of acceleration and follows the inverse square law with distance, which is the gravitational acceleration of Newton. *C* also follows an inverse square law with respect to distance, which has the same form as the Biot-Savart law. The form of *D* is similar to that of the Lorenz gauge, which indicates that the temporal change in mass potential leads to the spatial change in momentum potential. The scales of *C* and *D* represent the rotational and vibrational frequencies of the clusters, respectively.

e) Field equations

The field equations are derived from the spatial derivatives of the potential field, which include the equations of the potential and action fields (see Appendix B for de tails). The two sets of equations completely determine the evolution of the particle field.

i. *Equations of potential field*

The spatial second derivative of the potential field gives the corresponding equations as follows

$$(\nabla\cdot\nabla)\boldsymbol{A} = \nabla^2\boldsymbol{A} = -\alpha_s\,\boldsymbol{j}, \tag{32}$$

$$\nabla\cdot\boldsymbol{G} = -\nabla^2\Phi = -\frac{1}{\varphi_s}\rho, \tag{33}$$

$$\nabla\times\boldsymbol{G} = -\nabla\times\nabla\Phi \equiv 0, \tag{34}$$

$$\nabla\cdot\boldsymbol{C} = \nabla\cdot(\nabla\times\boldsymbol{A}) \equiv 0, \tag{35}$$

$$\nabla\times\boldsymbol{C} = \nabla\times(\nabla\times\boldsymbol{A}) = \alpha_s\boldsymbol{j} - \frac{1}{c^2}\frac{\partial\boldsymbol{G}}{\partial t}, \tag{36}$$

$$\nabla D = \nabla(\nabla\cdot\boldsymbol{A}) = -\frac{1}{c^2}\frac{\partial\boldsymbol{G}}{\partial t}. \tag{37}$$

Eq. (33) is the potential equation of Newton, and Eqs. (33){(36) are similar to the Maxwell equations. Eq. (37) expresses a quantity similar to the displacement current.

ii. *Equations of action field*

The spatial second derivative of the action field (the spatial third derivative of the potential field) gives the corresponding equations as follows

$$\nabla^2\boldsymbol{G} = -\frac{1}{\varphi_s}\nabla\rho, \tag{38}$$

$$\nabla^2\boldsymbol{C} = -\alpha_s\nabla\times\boldsymbol{j}, \tag{39}$$

$$\nabla^2 D = \alpha_s\frac{\partial\rho}{\partial t}. \tag{40}$$

There are only three equations of the action field, namely, the Poisson equations of the gradient, curl, and divergence fields. It can be seen that the action field is caused by the spatial or temporal change in the density field. This set of equations has a clear physical meaning; it contains only two free parameters and is of high symmetry and simplicity. The field equations are derived from the potential field, which guarantees the existence of solutions to the equations. The equations of the action field are called the unified field equations.

III. Real-Particle Field Properties

a) Unity of fields

From the constants listed in Table II, the relationship among the gravitational, electromagnetic, and particle fields can be derived. By setting the medium coefficient as the reciprocal of the gravitational constant ($\varphi = \gamma^{-1}$), the gravitational field equations can be obtained from the real-particle field equations. By using the scale conversion factor ($\theta = \epsilon/\varphi$) and the mass-to-charge ratio of an electron ($\sigma = M_e/Q_e$), the relationship between the

© 2021 Global Journals

Table II: Quantities and relations among the gravitational, electromagnetic, and particle fields

Field quantity	Relation	Constant (N: newton, C: coulomb)
Light speed	$u_s = c = 1/\sqrt{\alpha\varphi}$	$c = 2.9979246 \times 10^{8}\ \mathrm{m\,s^{-1}}$
Gravitational constant	$\gamma = \varphi^{-1}$	$\gamma = 6.6742867 \times 10^{-11}\ \mathrm{N\,m^2\,kg^{-2}}$
Medium coefficient	$\varphi = 4\pi\varphi_s = \gamma^{-1}$	$\varphi = 1.4982874 \times 10^{10}\ \mathrm{N^{-1}\,m^{-2}\,kg^2}$
Dynamics coefficient	$\alpha = \alpha_s/4\pi = \gamma c^{-2}$	$\alpha = 7.4261454 \times 10^{-28}\ \mathrm{N\,s^2\,kg^{-2}}$
Mass of electron	M_e	$M_e = 9.1093821 \times 10^{-31}\ \mathrm{kg}$
Charge of electron	Q_e	$Q_e = 1.6021765 \times 10^{-19}\ \mathrm{C}$
Mass-to-charge ratio	$\sigma = M_e/Q_e$	$\sigma = 5.6856296 \times 10^{-12}\ \mathrm{kg\,C^{-1}}$
Scale conversion factor	$\theta = \epsilon/\varphi = 4\pi\epsilon_s\gamma$	$\theta = 7.4261454 \times 10^{-21}\ \mathrm{C^2\,kg^{-2}}$
Vacuum permittivity	$\epsilon_s = \theta\varphi_s$	$\epsilon_s = 8.8541877 \times 10^{-12}\ \mathrm{C^2\,N^{-1}\,m^{-2}}$
Vacuum permeability	$\mu_s = \alpha_s/\theta$	$\mu_s = 4\pi \times 10^{-7}\ \mathrm{N\,C^{-2}\,s^2}$
Charge density	$\rho_e = \sigma\theta\rho$	$\sigma\theta = 4.2222312 \times 10^{-32}\ \mathrm{C\,kg^{-1}}$
Current density	$\boldsymbol{j}_e = \sigma\theta\boldsymbol{j}$	$\sigma\theta = 4.2222312 \times 10^{-32}\ \mathrm{C\,kg^{-1}}$
Electric potential	$\Phi_e = \sigma\Phi$	$\sigma = 5.6856296 \times 10^{-12}\ \mathrm{kg\,C^{-1}}$
Magnetic potential	$\boldsymbol{A}_e = \sigma\boldsymbol{A}$	$\sigma = 5.6856296 \times 10^{-12}\ \mathrm{kg\,C^{-1}}$
Electric field	$\boldsymbol{E}_e = \sigma\boldsymbol{G}$	$\sigma = 5.6856296 \times 10^{-12}\ \mathrm{kg\,C^{-1}}$
Magnetic induction	$\boldsymbol{B}_e = \sigma\boldsymbol{C}$	$\sigma = 5.6856296 \times 10^{-12}\ \mathrm{kg\,C^{-1}}$

electromagnetic and real-particle fields can be found. If the symmetry of charge is "broken", i.e., there exists no negative charge, the difference between charge and mass is merely a constant factor ($\sigma\theta$). In essence, the gravitational and electromagnetic fields are both real-particle fields described by unified field equations.

b) Equation of motion

i. *Motion theorem*

The force on clusters can be expressed by the motion derivative of the momentum density as

$$\boldsymbol{f} = \frac{D\boldsymbol{j}}{Dt} = \frac{\partial \boldsymbol{j}}{\partial t} + \nabla\cdot(\boldsymbol{j}\boldsymbol{u})$$

$$= \rho\left[\frac{\partial \boldsymbol{u}}{\partial t} + (\boldsymbol{u}\cdot\nabla)\boldsymbol{u}\right];\quad f_s = \frac{\rho_s r_s}{t_s^2}. \tag{41}$$

This equation is called the motion theorem. It can be written in the form of Newton's second law

$$\boldsymbol{f} = \rho\boldsymbol{a},\quad \boldsymbol{a} = \frac{\partial \boldsymbol{u}}{\partial t} + (\boldsymbol{u}\cdot\nabla)\boldsymbol{u};$$

$$a_s = \frac{f_s}{\rho_s} = \frac{r_s}{t_s^2}, \tag{42}$$

where $\boldsymbol{a}$ is the acceleration, $\partial\boldsymbol{u}/\partial t$ is the linear acceleration, and $(\boldsymbol{u}\cdot\nabla)\boldsymbol{u}$ is the curve acceleration.

ii. *Force field*

The coupling of the density and action fields produces the force field. The force field includes the gradient force $\boldsymbol{f}_G$, curl force $\boldsymbol{f}_C$, and divergence force $\boldsymbol{f}_D$, which represent the translation, rotation, and vibration forces on the cluster, respectively.

$$\boldsymbol{f}_G = \rho\boldsymbol{G} = -\rho\nabla\Phi,$$

$$\boldsymbol{f}_C = \boldsymbol{j}\times\boldsymbol{C} = \rho\boldsymbol{u}\times\boldsymbol{C},$$

$$\boldsymbol{f}_D = \boldsymbol{j}D = \rho D\boldsymbol{u}. \tag{43}$$

The gradient, curl, and divergence forces cause linear acceleration, curve acceleration, and motion resistance, respectively. The motion resistance is proportional to the velocity $\boldsymbol{u}$ with the resistance coefficient ρD.

iii. *Motion equation*

According to $\boldsymbol{f} = \boldsymbol{f}_G + \boldsymbol{f}_C + \boldsymbol{f}_D$ the motion equation can be obtained as

$$\frac{\partial \boldsymbol{u}}{\partial t} + (\boldsymbol{u}\cdot\nabla)\boldsymbol{u} = \boldsymbol{G} + \boldsymbol{u}\times\boldsymbol{C} + D\boldsymbol{u}. \tag{44}$$

This equation gives the motion law of clusters in the realparticle field, which is similar to the Navier-Stokes equation in fluid mechanics [15]. The left side of the equation is derived from the density field, and the right side is derived from the density and potential fields. A solution to this equation definitely exists. According to Eq. (25), $\boldsymbol{f} = 0$ is the case of momentum conservation.

c) Properties of dark matter

i. *Waves of dark matter*

The solutions to the equations of divergence [Eqs. (31), (37), and (40)] are traveling waves in the form

$$\boldsymbol{A}(\xi) = \frac{\boldsymbol{k}}{\omega}W(\xi),$$

$$\Phi(\xi, t) = -W(\xi) + W_0(t),$$

$$D_0(t) = \frac{1}{c^2}\frac{\mathrm{d}W_0}{\mathrm{d}t}.$$

In Eq. (45), $\xi = \boldsymbol{k}\cdot\boldsymbol{r} - \omega t$ is the wave parameter, $\boldsymbol{k}$ is the wave vector, ω is the angular frequency, and $W(\xi)$

© 2021 Global Journals

is any positive function. Real physics claims that dark matter particles are electrons and that the dark matter in the universe is electronic gas. Therefore, such traveling waves in an electronic gas are equivalent to electromagnetic and gravitational waves. This implies that electrons not only participate in light emission (such as atomic and X-ray radiations) but also transmit electromagnetic and gravitational waves. In Eq. (45), $c = \omega/|\boldsymbol{k}|$ is the speed of electromagnetic waves and also the communication speed used for time synchronization. The undulation of the electronic gas is neither a simple transverse wave nor a longitudinal wave; it is a cluster vibration relative to its center of mass, called a spherical wavelet. The electronic clusters are three-dimensional vibrators, and the local vibration of clusters is the physical basis of the Huygens-Fresnel principle [18]. As electronic gas is the medium of undulation, these waves propagate at the speed of light, so there is no instantaneous action.

ii. *Density of dark matter*

The characteristic wavelength between an ultraviolet ray and an X-ray is $\lambda_c = 0.01\,\mu\mathrm{m}$, and the corresponding characteristic volume is $\lambda_c^3 = 10^{-24}\mathrm{m}^3$ We believe that ultraviolet ray originates from cluster vibration and X-ray from electron vibration, so the characteristic volume contains only a single electron, which corresponds to a characteristic density $n_c = \lambda_c^{-3} = 10^{24}\,\mathrm{m}^{-3}$. Since the sunlight reaching the earth does not contain X-rays, n_c is a feature density of dark matter between the sun and the earth. The corresponding mass density is $\rho_c = n_c M_e \approx 9.1 \times 10^{-7}\ \mathrm{kg\,m}^{-3}$. This value is very small compared with the mass density of air ($\sim 1.2\,\mathrm{kg\,m}^{-3}$) in the standard state, so the existence of electrons is not perceivable by humans. Compared with the mass density of planets in the solar system, the electron mass density is negligible, which explains why the hypothesis of absolute space is valid within the solar system. However, the mass of dark matter cannot be ignored in galactic scales. Newtonian gravitational theory must be replaced by the universal theory of real-particle field.

iii. *Structure of matter*

Real physics does not consider particles without mass or volume and only recognizes electrons and protons with both mass and volume. Electrons alone constitute dark matter, and electrons and protons together constitute "bright matter". According to the nested structure model, matter is composed of clusters of different levels[9]. For example, protons and electrons form neutrons, protons and neutrons form nuclei, nuclei and electrons form atoms, atoms form molecules, and so on. At the celestial level, planets and satellites form planetary systems, stars and planets form stellar systems, stellar systems form galaxies, galaxies form galaxy clusters, and so on. This case is similar to a computer using a string of $\{1, 0\}$ to express arbitrary information. From this perspective, dark matter is also "bright matter."

iv. *Modulus of elasticity*

According to the scale relation in Eq. (6), the vibration energy of electronic clusters is $H_s = Y_s V_s = hv$. Then, the elastic modulus of the electronic clusters is

$$Y_s = \frac{H_s}{V_s} = \frac{hv}{\lambda^3} = \frac{hv^4}{c^3}. \tag{46}$$

According to Eq. (46), the elastic modulus represents the density of the vibration energy, which is proportional to the fourth power of the wave frequency. Because the energy density scale equals the pressure scale, the elastic modulus also represents the wave pressure of dark matter.

v. *Nature of photons*

Real physics proves theoretically that the dark matter field equals the electromagnetic field. There is no doubt about its existence, because we feel it through light waves. The light propagation depends on the vibration of electronic clusters, and electronic gas is the medium of light waves. As electronic clusters serve as the unit of vibration, they are the entities corresponding to photons. Photons are real particles with volume V_s, mass $\rho_c V_s$, vibration energy $H_s = hv$, and elastic modulus $Y_s = (hv^4)/c^3$. The number of photons $\tilde{V} = V/V_s = V/\lambda^3$ is not conserved but depends on the wavelength.

vi. *Radiation of dark matter*

Assuming a dark matter field of volume, V, and photon number, $\tilde{V} = V(v/c)^3$, the vibration energy in the frequency range from v to $v + dv$ is

$$\mathrm{d}H(v) = hv \cdot \mathrm{d}\tilde{V} = \frac{3V}{c^3} hv^3\,\mathrm{d}v. \tag{47}$$

If the thermal equilibrium temperature is T, let $\beta = (kT)^{-1}$, and $H_n = nhv$; then, the probability of finding H_n is $P_n(\beta, v) \propto \mathrm{e}^{-\beta H_n}$. Subsequently, the probability of finding v at β is

$$P(\beta, v) = a \sum_{n=1}^{\infty} P_n(\beta, v) = \frac{a}{\mathrm{e}^{\beta hv} - 1}, \tag{48}$$

where a is a normalization factor. Consequently, the vibration energy of dark matter in thermal equilibrium can be derived within the frequency interval $\mathrm{d}v$ as

$$\mathrm{d}H(\beta, v) = P(\beta, v)\,\mathrm{d}H(v) = \frac{3aV}{c^3} \frac{hv^3}{\mathrm{e}^{\beta hv} - 1}\,\mathrm{d}v. \tag{49}$$

Eq. (49) is the same as the law of black-body radiation first proposed by Planck [19], except for the normalization factor. Cosmological observations prove that the cosmic microwave background (CMB) corresponds to a black-body of temperature

© 2021 Global Journals

T= 2.72548K [20]. We explain that CMB originates from the thermal equilibrium radiation of dark matter, which has a uniform density; therefore, there is no photonic current in the universe.

vii. *Dark matter and ether*

To explain the origin of universal gravitation, some scientists hypothesized the existence of gravitation ether. For example, Le Sage proposed an ether model based on the streams of tiny unseen particles, called ultramundane corpuscles [21]. According to this model, any material object is impacted by corpuscles from all directions, and any two material bodies partially shield each other from the impinging corpuscles. The shielding effect results in a net imbalance in the pressure exerted on the bodies and tends to drive the bodies together. Similarly, luminiferous ether was once considered to be the medium of light waves, like air is the medium of sound waves. Since Maxwell established electromagnetic field theory, luminiferous ether was also called electromagnetic ether [22]. These ethers are media filled with space and cannot be seen or touched. They must be stiff enough to transmit gravitation and light waves, yet light enough not to interfere with stellar motions. Because people could not well understand the concept of ether, it was abandoned after the introduction of the special theory of relativity by Einstein [23].

Dark phenomenon is a hypothesis proposed by modern cosmology based on observations of the movement of galaxies. In reality, dark phenomenon is a modern version of the dismissed ether. Real physics confirms that dark matter particles are electrons and dark matter is electronic gas. The properties of the proposed ether are very similar to those of electronic gas. It is invisible, intangible, and very dense in space but extremely light in weight. It is ubiquitous with a uniform density throughout the universe. The motion of \bright matter" hardly disturbs the electronic gas, while the vibration of electronic clusters easily causes ripples of dark matter. Elastic electrons have mass and gravity but no charge or electromagnetic effects. We cannot perceive the existence of electronic gas because the mass of electrons is too small and question its lack of electric charge because of current knowledge limitations. The interactions between real particles solely include mass attraction and motion repulsion and appear in the form of gradient, curl, and divergence forces. In fact, real physics does not require the concept of electric charge.

IV. Conclusions

This research is based on the real-particle field theory and proves that dark matter comprises elastic electrons with a full cosmic background. The real-particle field theory modifies the core concepts of matter, particle, space, and time, and makes discoveries regarding the motion forms and interaction laws of elastic particles. Elastic particles have three independent modes of motion-translation, rotation, and vibration. Particle interaction includes mass attraction and motion repulsion. The distribution of particle mass and momentum constitutes a density field; the spatial convolution of densities forms a potential field; and the spatial derivative of potentials determines an action field. The action field includes the gradient, curl, and divergence fields, and its evolution follows a set of Poisson equations. The real particle field theory combines the quantum and relativity principles, and its inferences encompass the classical laws of mechanics and electromagnetism. The theory and associated research demonstrate that the electric and magnetic potentials correspond to the interactions of mass attraction and motion repulsion. The nature of electromagnetic and gravitational waves is the vibration of electronic gas, and the essence of photons is the electronic cluster. The mechanical features of photons can be characterized by their volume, mass, and elasticity.

The essence of matter is discrete particles, and the field is merely a mathematical description of particle motion in a continuous form. Physical quantities are quantized by scales, while volume scale connects discrete particles to continuous fields. Real physics is a full-scale theory based on the principle of objectivity, which applies to the whole space range from atoms to the universe. Once the initial and boundary conditions are given, the evolution of the real-particle system is determined by the unified field equation. It is an exciting and challenging task to determine the structure of atoms and the motion of celestial bodies by using the real-particle field theory.

Acknowledgments

The author would like to thank Professor L.H. Xie for the helpful discussions. The research leading to these results received funding from the NSFC under Grant No[61775102].

Appendix A: Derivation of Continuity Theorem

Let $\boldsymbol{z}(\boldsymbol{r},t)$ be the bulk density of any physical quantity $\boldsymbol{Z}(t)$, then, the time derivative of $\boldsymbol{Z}(t)$ can be expressed as

$$\frac{\mathrm{d}\boldsymbol{Z}}{\mathrm{d}t}=\frac{\mathrm{d}}{\mathrm{d}t}\left[\int_V \boldsymbol{z}(\boldsymbol{r}',t)\,\mathrm{d}V'\right]\equiv\int_V \frac{D\boldsymbol{z}}{Dt}\,\mathrm{d}V', \quad \text{(A1)}$$

where $D\boldsymbol{z}/Dt$ is the motion derivative of $\boldsymbol{z}$.

As the density $\boldsymbol{z}$ and volume V are both changeable, we have

© 2021 Global Journals

$$\frac{\mathrm{d}\boldsymbol{Z}}{\mathrm{d}t} \equiv \int_V \frac{D\boldsymbol{z}}{Dt}\,\mathrm{d}V' = \frac{1}{t_s}\left[\int_{V+\Delta V} \boldsymbol{z}(\boldsymbol{r}', t+t_s)\,\mathrm{d}V' - \int_V \boldsymbol{z}(\boldsymbol{r}', t)\,\mathrm{d}V'\right]$$

$$= \frac{1}{t_s}\left[\int_V \boldsymbol{z}(\boldsymbol{r}', t+t_s)\,\mathrm{d}V' - \int_V \boldsymbol{z}(\boldsymbol{r}', t)\,\mathrm{d}V'\right] + \frac{1}{t_s}\int_{\Delta V} \boldsymbol{z}(\boldsymbol{r}', t)\,\mathrm{d}V' = \boldsymbol{R}(\Delta \boldsymbol{z}) + \boldsymbol{R}(\Delta V), \tag{A2}$$

where $\boldsymbol{R}(\Delta \boldsymbol{z})$ is the variation rate of $\boldsymbol{Z}$ caused by the change in density and constant volume, and $\boldsymbol{R}(\Delta V)$ is the variation rate caused by the change in volume and constant density.

$$\boldsymbol{R}(\Delta \boldsymbol{z}) = \int_V \frac{\partial \boldsymbol{z}}{\partial t}\,\mathrm{d}V' \tag{A3}$$

$$= \frac{1}{t_s}\int_V \left[\boldsymbol{z}(\boldsymbol{r}', t+t_s) - \boldsymbol{z}(\boldsymbol{r}', t)\right]\,\mathrm{d}V',$$

$$\boldsymbol{R}(\Delta V) = \frac{1}{t_s}\int_{\Delta V} \boldsymbol{z}(\boldsymbol{r}', t)\,\mathrm{d}V'. \tag{A4}$$

As the volume element on the boundary can be represented by the area element, $\mathrm{d}V' = (\boldsymbol{u}t_s)\cdot \mathrm{d}\boldsymbol{S}'$, $\boldsymbol{R}(\Delta V)$ can be calculated with the help of a surface integral as

$$\boldsymbol{R}(\Delta V) = \frac{1}{t_s}\int_{\Delta V} \boldsymbol{z}(\boldsymbol{r}', t)\,\mathrm{d}V'$$

$$= \frac{1}{t_s}\oint_S \boldsymbol{z}\,(\boldsymbol{u}t_s)\cdot \mathrm{d}\boldsymbol{S}' = \oint_S \boldsymbol{z}\boldsymbol{u}\cdot \mathrm{d}\boldsymbol{S}' \tag{A5}$$

$$= \int_V \nabla\cdot(\boldsymbol{z}\boldsymbol{u})\,\mathrm{d}V',$$

where $\boldsymbol{z}\boldsymbol{u}$ is the dyad of $\boldsymbol{z}$ and $\boldsymbol{u}$. In the last step of the above derivation, the Gaussian formula of the vector integral is applied to convert a surface integral to a volume integral.

Substituting Eqs. (A3) and (A5) into Eq. (A2), we have

$$\int_V \frac{D\boldsymbol{z}}{Dt}\,\mathrm{d}V' = \int_V \left[\frac{\partial \boldsymbol{z}}{\partial t} + \nabla\cdot(\boldsymbol{z}\boldsymbol{u})\right]\,\mathrm{d}V'. \tag{A6}$$

Because the volume V is arbitrary, we can obtain the expression of motion derivative as

$$\frac{D\boldsymbol{z}}{Dt} = \frac{\partial \boldsymbol{z}}{\partial t} + \nabla\cdot(\boldsymbol{z}\boldsymbol{u}). \tag{A7}$$

This is the continuity theorem given by Eq. (24).

Appendix B: Derivation of Field Equations

a) Gradient field

The mass potential given by Eq. (19) is expressed as

$$\Phi(\boldsymbol{r}, t) = \frac{-1}{4\pi\varphi_s}\int_V \frac{\rho(\boldsymbol{r}', t)}{r}\,\mathrm{d}V'; \quad \Phi_s = c^2. \tag{B1}$$

The gradient field, G, is defined as the negative gradient of mass potential, i.e.

$$\boldsymbol{G} = -\nabla\Phi = \frac{1}{\varphi}\int_V \rho(\boldsymbol{r}', t)\nabla\left(\frac{1}{r}\right)\,\mathrm{d}V'$$

$$= \frac{-1}{4\pi\varphi_s}\int_V \frac{\rho(\boldsymbol{r}', t)\,\boldsymbol{r}}{r^3}\,\mathrm{d}V'; \quad G_s = \frac{r_s}{t_s^2}.$$

The divergence of the gradient field is calculated as follows

$$\nabla\cdot\boldsymbol{G} = -\nabla^2\Phi = \frac{1}{4\pi\varphi_s}\int_V \rho(\boldsymbol{r}', t)\nabla^2\left(\frac{1}{r}\right)\,\mathrm{d}V'$$

$$= -\frac{1}{\varphi_s}\int_V \rho(\boldsymbol{r}', t)\,\delta(\boldsymbol{r}-\boldsymbol{r}')\,\mathrm{d}V' = -\frac{\rho}{\varphi_s}, \tag{B3}$$

where $\delta(\boldsymbol{r})$ is the Dirac delta. $\nabla\cdot\boldsymbol{G} = -\rho/\varphi_s$ is known as the Gaussian theorem of gradient field, and $\nabla^2\Phi = \rho/\varphi_s$ is the Poisson equation of the mass potential.

According to vector calculus, the curl of a gradient field is always equal to zero, i.e.

$$\nabla\times\boldsymbol{G} = \nabla\times\nabla\Phi \equiv 0, \tag{B4}$$

which indicates that the gradient field is vortex-free.

Applying the curl operator on both sides of Eq. (B4) gives

$$\nabla\times(\nabla\times\boldsymbol{G}) \equiv \nabla(\nabla\cdot\boldsymbol{G}) - \nabla^2\boldsymbol{G} = -\frac{\nabla\rho}{\varphi_s} - \nabla^2\boldsymbol{G} \equiv 0, \tag{B5}$$

then, we obtain

$$\nabla^2\boldsymbol{G} = -\frac{1}{\varphi_s}\nabla\rho. \tag{B6}$$

This is the Poisson equation of the gradient field.

b) Divergence field

The momentum potential given by Eq. (20) is expressed as

$$\boldsymbol{A}(\boldsymbol{r}, t) = \frac{\alpha_s}{4\pi}\int_V \frac{\boldsymbol{j}(\boldsymbol{r}', t)}{r}\,\mathrm{d}V'; \quad A_s = c. \tag{B7}$$

The divergence field, *D*, is defined as the divergence of the momentum potential, which can be calculated as follows

© 2021 Global Journals

$$D = \nabla \cdot \boldsymbol{A} = \alpha \int_V \boldsymbol{j}(\boldsymbol{r}', t) \cdot \nabla \left(\frac{1}{r}\right) \mathrm{d}V' = -\alpha \int_V \boldsymbol{j} \cdot \nabla' \left(\frac{1}{r}\right) \mathrm{d}V'$$

$$= -\alpha \int_V \left[\nabla' \cdot \left(\frac{\boldsymbol{j}}{r}\right) - \frac{\nabla' \cdot \boldsymbol{j}}{r}\right] \mathrm{d}V' = -\alpha \int_V \nabla' \cdot \left(\frac{\boldsymbol{j}}{r}\right) \mathrm{d}V' - \alpha \int_V \frac{1}{r} \frac{\partial \rho}{\partial t} \mathrm{d}V'$$

$$= -\alpha \oint_S \frac{\boldsymbol{j} \cdot \mathrm{d}\boldsymbol{S}'}{r} - \alpha \frac{\partial}{\partial t} \left(\int_V \frac{\rho}{r} \mathrm{d}V'\right) = -\frac{\alpha_s}{4\pi} \oint_S \frac{\boldsymbol{j} \cdot \mathrm{d}\boldsymbol{S}'}{r} + \alpha_s \varphi_s \frac{\partial \Phi}{\partial t}. \tag{B7}$$

Let the boundary satisfy the constraint

$$D_0(t) = \frac{\alpha_s}{4\pi} \oint_S \frac{\boldsymbol{j} \cdot \mathrm{d}\boldsymbol{S}'}{r}, \tag{B9}$$

then, the divergence can be written as

$$D = \nabla \cdot \boldsymbol{A} = \frac{1}{c^2} \frac{\partial \Phi}{\partial t} - D_0(t); \quad D_s = \frac{1}{t_s}. \tag{B10}$$

The gradient of a divergence field can be calculated as follows

$$\nabla D = \nabla(\nabla \cdot \boldsymbol{A}) = \nabla \left[\frac{1}{c^2} \frac{\partial \Phi}{\partial t} - D_0(t)\right]$$

$$= \frac{1}{c^2} \nabla \left(\frac{\partial \Phi}{\partial t}\right) = -\frac{1}{c^2} \frac{\partial \boldsymbol{G}}{\partial t}. \tag{B11}$$

The Poisson equation of the divergence field can be obtained by applying the divergence operation to Eq. (B11).

$$\nabla \cdot (\nabla D) = \nabla^2 D = -\frac{1}{c^2} \nabla \cdot \left(\frac{\partial \boldsymbol{G}}{\partial t}\right)$$

$$= -\frac{1}{c^2} \frac{\partial}{\partial t} (\nabla \cdot \boldsymbol{G}) = \alpha_s \frac{\partial \rho}{\partial t}. \tag{B12}$$

c) Curl field

The curl field C is the curl of momentum potential,

$$\boldsymbol{C} = \nabla \times \boldsymbol{A}$$

$$= \alpha \int_V \nabla \times \left[\frac{\boldsymbol{j}(\boldsymbol{r}', t)}{r}\right] \mathrm{d}V'$$

$$= \alpha \int_V \nabla \left(\frac{1}{r}\right) \times \boldsymbol{j} \, \mathrm{d}V'$$

$$= \frac{\alpha_s}{4\pi} \int_V \frac{\boldsymbol{j} \times \boldsymbol{r}}{r^3} \mathrm{d}V'; \quad C_s = \frac{1}{t_s}. \tag{B13}$$

The divergence of a curl field is always equal to zero, i.e.

$$\nabla \cdot \boldsymbol{C} = \nabla \cdot (\nabla \times \boldsymbol{A}) \equiv 0. \tag{B14}$$

Applying the Laplace operator to *A* gives the Poisson equation of momentum potential as

$$\nabla^2 \boldsymbol{A} = \frac{\alpha_s}{4\pi} \int_V \boldsymbol{j}(\boldsymbol{r}', t) \nabla^2 \left(\frac{1}{r}\right) \mathrm{d}V'$$

$$= -\alpha_s \int_V \boldsymbol{j}(\boldsymbol{r}, t) \delta(\boldsymbol{r} - \boldsymbol{r}') \, \mathrm{d}V' = -\alpha_s \boldsymbol{j}. \tag{B15}$$

The curl of a curl field can be obtained based on Eqs. (B10) and (B15) as

$$\nabla \times \boldsymbol{C} = \nabla \times (\nabla \times \boldsymbol{A})$$

$$\equiv \nabla(\nabla \cdot \boldsymbol{A}) - \nabla^2 \boldsymbol{A} = \nabla D + \alpha_s \boldsymbol{j}. \tag{B16}$$

Substituting Eq. (B11) into Eq. (B16), we obtain

$$\nabla \times \boldsymbol{C} = \alpha_s \boldsymbol{j} - \frac{1}{c^2} \frac{\partial \boldsymbol{G}}{\partial t}. \tag{B17}$$

Applying the curl operator on the leftmost side of Eq. (B16) and using the identity $\nabla \cdot \boldsymbol{C} \equiv 0$, we have

$$\nabla \times (\nabla \times \boldsymbol{C}) \equiv \nabla(\nabla \cdot \boldsymbol{C}) - \nabla^2 \boldsymbol{C} = -\nabla^2 \boldsymbol{C}. \tag{B18}$$

Applying the curl operator on the rightmost side of Eq. (B16) and using the identity $\nabla \times (\nabla D) \equiv 0$, we have

$$\nabla \times (\nabla D + \alpha_s \boldsymbol{j}) = \alpha_s \nabla \times \boldsymbol{j}. \tag{B19}$$

Because Eq. (B18) equals Eq. (B19), we can obtain the Poisson equation of curl field as

$$\nabla^2 \boldsymbol{C} = -\alpha_s \nabla \times \boldsymbol{j}. \tag{B20}$$

References Références Referencias

1. J. M. Overduin and P. S. Wesson, *Dark Sky, Dark Matter* (Institute of Physics Pub, Bristol, 2003).
2. N. C. M. Martens and D. Lehmkuhl, *Dark matter = mod ified gravity? Scrutinising the spacetime-matter distinction through the modified gravity/dark matter lens*, Stud ies in History and Philosophy of Modern Physics 72 237 (2020). https://doi.org/10.1016/j.shpsb.2020.08.003
3. G. Bertone, D. Hooper and J. Silk, *Particle dark matter: evidence, candidates and constraints*, Phys. Rep. 405 279 (2005). https://doi.org/10.1016/j.physrep.2004.08.031
4. V. Trimble, *Existence and natrure of dark matter in the universe*, Ann. Rev. Astro. Astrophys. 25 425

© 2021 Global Journals

(1987). https://doi.org/10.1146/annurev.aa.25.090187.002233
5. T. Clifton, P. G. Ferreira, A. Padilla and C. Skordis, *Mod ified gravity and cosmology*, Phys. Rep. 513(1) 1 (2012). https://doi.org/10.1016/j.physrep.2012.01.001
6. M. Milgrom, *A modification of the Newtonian dynamics as a possible alternative to the hidden mass hypothesis*, Astrophys. J. 270 365 (1983). https://doi.org /10.1068/161130
7. Z. C. Liang, *Modeling of real particles*, J. Phys. Conf. Ser. 1391 012026 (2019). https://doi.org/10.1088/1742- 6596/1391/1/012026
8. Z. C. Liang, *Outline of real physics*, Global Journal of Science Frontier Research: A 20(3) 9 (2020). https://doi.org/10.34257/gjsfravol20is3pg9
9. Z. C. Liang, *Motion, energy, and state of body particle system*, Theoretical Physics 4 66 (2019). https://doi.org/10.22606/tp.2019.42003
10. Z. C. Liang, *Motion of elastic particles and spectrum of hydrogen atoms*, Global Journal of Science Frontier Research: F 19(4) 19 (2019). https://doi.org/10.34257/gjsfrfvol19is4pg19
11. Z. C. Liang, *Cluster ensemble statistics of body parti cle system*, New Horizons in Mathematical Physics 3 53 (2019). https://doi.org/10.22606/nhmp.2019.32002
12. Z. C. Liang, *The origin of gravitation and electromag netism*, Theoretical Physics 4 85 (2019). https://doi.org/10.22606/tp.2019.42004
13. Z. C. Liang, *Essence of light: particle, field and interac tion*, Proc. SPIE 10755 107550I (2018). https://doi.org /10.1117/12.2316422
14. Einstein himself was deeply concerned regarding the op position between the continuity of gravitational theory and the discreteness of quantum theory. In his last letter to Besso (1954), Einstein stated that "It is quite possible that physics cannot be founded on the concept of field— that is to say—on continuous elements. However, then, out of my whole castle in the air—including the theory of gravitation, but also most of the current physics—there would remain almost nothing."
15. S. L. Jin and Y. L. Ma, *Theoretical Mechanics* (Higher Education Press, Beijing, 1985).
16. S. H. Guo, *Electrodynamics* (Higher Education Press, Beijing, 2008).
17. S. P. Wang, *Theory and Application of Information Op tics* (Beijing University of Posts and Telecommunications Press, Beijing, 2004).
18. M. Born and E. Wolf, *Principle of Optics* (Pergamon Press, Exeter, 1980) 6th ed.
19. M. Planck, *Zur Theorie des Gesetzes der Energiev erteilung im Normalspectrum*, Verhandl. Dtsch. phys. Ges. 2 237 (1900).
20. D. J. Fixsen, *The temperature of the cosmic mi crowave background*, Astrophys. J. 707(2) 916 (2009). https://doi.org/10.1088/0004-637X/707/2/916.
21. W. Thomson, *On the ultramundane corpuscules of Le Sage, also on the motion of rigid solids in a liquid cir culating irrotationally through perforations in them or in a fixed solid*, The London, Edinburgh, and Dublin Philo sophical Magazine and Journal of Science 45 321 (1873). https://doi.org/10.1080/14786447308640865
22. J. C. Maxwell, *A Treatise on Electricity and Magnetism* (Cambridge University Press, Cambridge, 1873). https://doi.org/10.1017/CBO9780511709340.028
23. A. Einstein, *Sidelights on Relativity* (Methuen, London, 1922).

© 2021 Global Journals

Global Journal of Science Frontier Research (A) Volume XXI Issue VI Version I Year 2021
40

This page is intentionally left blank

© 2021 Global Journals

Global Journal of Science Frontier Research: a Physics and Space Science
Volume 21 Issue 6 Version 1.0 Year 2021
Type: Double Blind Peer Reviewed International Research Journal
Publisher: Global Journals
Online ISSN: 2249-4626 & Print ISSN: 0975-5896

Investigating the Operational Parameters of a Centrifugal Pump Used in Reverse Mode as Turbine for Electricity Generation

By Olaore Kayode Olatunde, Prof. Danshehu Bagudu Gwadangwaji, Prof. Muhammad Bayawa Aminu & Prof. Muazu Musa

Usmanu Danfodiyo University

Abstract- For thousands of years human beings have used the power of flowing water for various activities. However, there are several other ways we can generate energy using the power of water. This paper tends to demonstrate by experiment that the best efficiency point of a centrifugal pump both in direct and reverse mode can be investigated and used to determine electricity generation in a micro hydro scheme to power rural areas that might not be connected to the national grid. Investigations were done to test and measure the fuel rate of consumption of the centrifugal pump running in pump mode. The results demonstrated that the efficiency is indirectly proportional to the fuel level. The pressure and velocity head were also determined. The maximum velocity of flow was $3 \cdot 90\ \mathrm{m/s}$ at a pressure gauge of 39 pal. Investigations were also done by testing the centrifugal pump in the pump mode to determine its best efficiency point (BEP) which was71%. In the pump mode investigation, the measured parameters were flow rate ($8 \cdot 17\ \mathrm{m^3/s}$), speed ($3589$ rpm), power output ($129 \cdot 91$ Watts), power input ($183 \cdot 02$ Watts) and velocity flow ($3 \cdot 90\ \mathrm{m/s}$). The investigation shows that for the generation of electricity the centrifugal pump can be used as an alternative to a turbine.

Keywords: *centrifugal pump, small hydro power (SHP), pump as turbine (PaT), pump efficiency.*

GJSFR-A Classification: *FOR Code: 240599*



Strictly as per the compliance and regulations of:

© 2021. Olaore Kayode Olatunde, Prof. Danshehu Bagudu Gwadangwaji, Prof. Muhammad Bayawa Aminu & Prof. Muazu Musa. This research/review article is distributed under the terms of the Attribution-NonCommercial-NoDerivatives 4.0 International (CC BY-NC-ND 4.0). You must give appropriate credit to authors and reference this article if parts of the article are reproduced in any manner. Applicable licensing terms are at https://creativecommons.org/ licenses/by-nc-nd/4.0/.

Investigating the Operational Parameters of a Centrifugal Pump used in Reverse Mode as Turbine for Electricity Generation

Olaore Kayode Olatunde [α], Prof. Danshehu Bagudu Gwadangwaji [σ], Prof. Muhammad Bayawa Aminu [ρ] & Prof. Muazu Musa [ω]

Abstract- For thousands of years human beings have used the power of flowing water for various activities. However, there are several other ways we can generate energy using the power of water. This paper tends to demonstrate by experiment that the best efficiency point of a centrifugal pump both in direct and reverse mode can be investigated and used to determine electricity generation in a micro hydro scheme to power rural areas that might not be connected to the national grid. Investigations were done to test and measure the fuel rate of consumption of the centrifugal pump running in pump mode. The results demonstrated that the efficiency is indirectly proportional to the fuel level. The pressure and velocity head were also determined. The maximum velocity of flow was $3 \cdot 90\ \mathrm{m/s}$ at a pressure gauge of $39\ \mathrm{pal}$. Investigations were also done by testing the centrifugal pump in the pump mode to determine its best efficiency point (BEP) which was71%. In the pump mode investigation, the measured parameters were flow rate $(8 \cdot 17\ \mathrm{m^3/s})$, speed $(3589\ \mathrm{rpm})$, power output $(129 \cdot 91\ \mathrm{Watts})$, power input $(183 \cdot 02\ \mathrm{Watts})$ and velocity flow $(3 \cdot 90\ \mathrm{m/s})$. The investigation shows that for the generation of electricity the centrifugal pump can be used as an alternative to a turbine.

Keywords: *centrifugal pump, small hydro power (SHP), pump as turbine (PaT), pump efficiency.*

Nomenclature

$SHP = Small\ Hydro\ Power$

$a = the\ submerged\ cross - sectional\ area$

$A = the\ total\ cross - sectional\ arera\ of\ the\ tank's\ side.$

$Vol_p = Volume\ of\ petrol\ in\ tank\ in\ liter$

$L = Length\ of\ tank\ in\ meter$

$D = Diameter\ of\ tank\ in\ meter$

$T_S = The\ hour\ on\ the\ gauge\ \ at\ the\ start, in\ seconds$

$T_E = The\ hour\ on\ the\ gauge\ \ at\ the\ end, in\ seconds$

$P_{out} = Power\ Output$

$S_{(rpm)} = Speed\ (Revolution\ per\ minute)$

$PWL = Pumping\ water\ level\ (m)$

$H_f = Sum\ of\ all\ Friction\ losses\ (m)$

$OP = Operating\ Pressure\ (psi)$

$Q = \ the\ flow\ rate$

$A = \ the\ diameter\ of\ the\ pipe$

$g = \ the\ acceleration\ due\ to\ gravity$

$\eta = \ the\ efficiency\ of\ the\ pump$

$P_{out} = \ the\ power\ output\ of\ the\ pump$

$P_{in} = \ the\ power\ input\ of\ the\ pump$

Author α: *Department of Physics, Institute of Applied Sciences, Kwara State Polytechnic, Ilorin, Nigeria. e-mail: mckayolaore@gmail.com*
Author σ ω: *Department of Mechcanical Engneering, Faculty of Engneering, Usmanu Danfodiyo University, Sokoto, Nigeria.*
Author ρ: *Department of Chemistry, Faculty of Science Usmanu Danfodiyo University. Sokoto, Nigeria.*

© 2021 Global Journals

I. Introduction

For thousands of years human beings have used the power of flowing water for various activities. Ancient civilizations used wooden paddle wheels to grind wheat and corn into flour. Hydro means Water in Greek, the word hydropower traditionally represents the energy generated by damming a river and using turbine systems to generate electrical power (Westra, 2008). However, there are several other ways we can generate energy using the power of water. Ocean waves, tidal currents and ocean water temperature differences can all be harnessed to generate energy.

Due to the depletion of natural resources and the global environmental problems, there is an international call for the need to develop renewable energy sources which have minimal environmental impact. Out of all the renewable energy resources one of the most mature techniques for renewable power generation is hydro-electric power. Large numbers of hydroelectric power generation plants are found in various countries of the world and the technology is now quite mature (Karassik et.al, 2008). However, considering the benefit from the economics of scale the possibility of implementing a policy of building large scale hydroelectric power generation plants is not always technologically, economically and environmentally feasible (Westra, 2008). Consequently, the interest in small scale hydroelectric power generation is increasing in most part of the developing countries of the world. In most cases construction costs for such plant are relatively high when compared with the small amount of power generation they produce (Tanbhir et al.). The high cost of construction limits the possibility for its proper implementation. If the cost of construction could be decreased small scale hydroelectric power production could become the more preferred renewable energy scheme the world over, most especially in the third world.

It is a well-known fact that electrical energy allows people to have better living conditions. Unfortunately in Nigeria there are still isolated places without the possibility of acquiring this all important resource. Some rural areas that are still not connected to the national grid exposes an opportunity where solutions could be found using pumps as turbines as an option or alternative to solving the electrical energy need.

For very low hydroelectric power plants (power less than 100 kW), the possibility of using pumps instead of turbines deserves optimum consideration which could be used for stand-alone or duel electricity generation purposes, even though there is an efficiency drop, a significant reduction in the capital cost of the plant gives it an advantage of the order of 10 to 1 or even more (Singh, 2005). The reverse working mode of a centrifugal pump is now being investigated and the technology for their use in electrical power generation is now scantily available. The advancement in electrical machinery control technologies, that allows the driving regulation with variable velocity, rotation sense and torque has created the possibility of the utilization of pumps working in inverse mode for power generation (He Zheng, 2011).

All known conventional turbines have inlet guide vane but a centrifugal pump working in reverse mode does not have one, This makes the variable discharge characteristic slightly different from that of common turbines (Mohd Azlan et al.). However, the reverse running mode of a centrifugal pump has the advantage of uniform quality, simple construction and durability. A reverse running pump turbine also has almost same efficiency as the pump, which is competitive with other turbine types; a small number of parts enable easy maintenance and inspection. (Fernandez, et al 2004).

This work examined the characteristics of a specific pump acting in inverse mode against rotational speed. To accomplish this, a suitable facility has been designed, built and characterized.

II. Materials and Methods

a) *Materials*

The following are the materials and instruments that were used and selected for the experiment: two centrifugal pumps, PVC pipes, PVC sockets, PVC elbows, PVC gum, thread seal tape, a galvanized iron tank, nuts, bolts, belt, sole blade and gauge valves. A large PVC ground tank, an overhead galvanized iron tank, a tachometer and a manometer. Some iron flat bars were used to repair and support the galvanized iron tank.

© 2021 Global Journals

Table 1: List of Materials and Instrument used

S/N	Material/Instruments	Pump Specification	Turbine Specification
1	Centrifugal Pump	3.8 hp	3.8 hp
2	Gauge Valve	51 mm	79 mm
3	Intake Pipe	Diameter 51 mm	Diameter 79 mm
4	Out Pipe	Diameter 65 mm	Diameter 68
5	Ground Tank	As Adequate	As Adequate
6	Tachometer	Cyber Tech. (NUSPSC 25174406)	Cyber Tech. (NUSPSC 25174406)
7	Manometer	Canstock (csp 14719981)	Canstock (csp 14719981)
8	Stop Watch	Digital	Digital
9	Impeller	Open Type	Pelton Type

b) Methods

i. *Performance Test on the Pump*

For the experimental set-up on the test performance of the pump a $0 \cdot 08 \times 0 \cdot 08 \times 0 \cdot 2\ (m)$ centrifugal pump was used and connected to a $1 \cdot 5\ hp(1 \cdot 1KW)$ motor. The schematic diagram (Fig.1) illustrates the experimental set up of the pump and motor test. Connected to the pump and motor are the inlet pipe, the discharge pipe, the Orifice meter, the tank and various instruments that were used for the measurements.

The centrifugal pump was connected to three (3) inch pipes coupled with delivery and discharge valves which were used to vary the flow rate of water as desired. The manometer and orifice meter were used to measure the pressure on the pump discharge head, while the tachometer was used to measure the speed of the pump at different flow rate by placing it at the extreme end of the shaft of the engine. A digital stop watch was used as the timing device to measure the time of the rotation of the engine in revolution per minute at an interval of twenty minutes (20 min). This was done to take record of the pump speed and the pressure difference.

Three moderate size local calabashes were placed on the top of the water in the tank so as to reduce turbulence while the test experiment was on going. The water retunes back to the tank and the water recycling was continued until all measurements were concluded. This process was repeated six times and readings were equally taken for time the process was repeated.

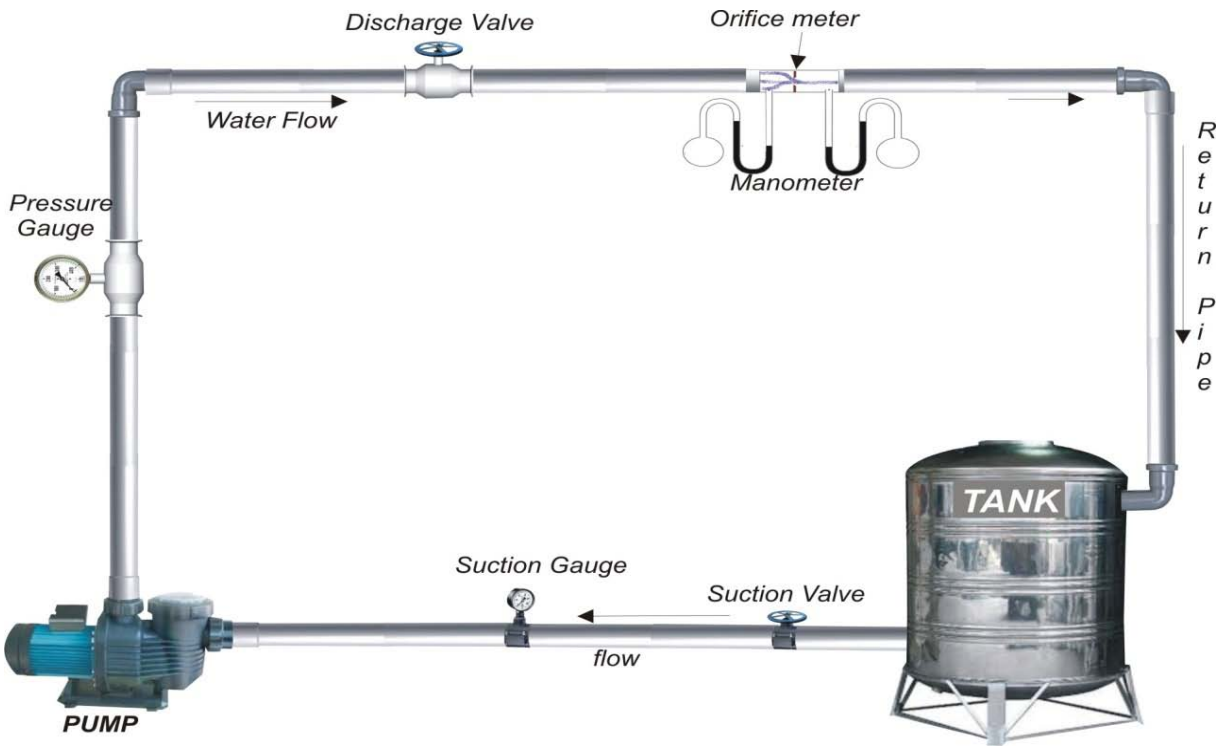

Figure 1: Pump Test Schematic Diagram

© 2021 Global Journals

ii. *Centrifugal Pump Test*

a. *Determination of Flow Rate (Q)*

Using the process adopted by Thapar (1984) and Boys (1987) the fiow rate was determined. See equation (2.1)

$$Q = 1 \cdot 73\sqrt{\Delta h}\, l/s \tag{2.1}$$

$$Q\ is\ the\ flow\ rate\ in\ liter/second\ \ and$$

$$\Delta h = pressure\ differential\ in\ cm\ Hg$$

b. *Determination of Power Input*

- *Measuring and Calculating Power Input*(P_{in}) *- Fuel (Petrol) Rate* (P_R) *of Consumption*

To measure the rate of fuel (petrol) consumption for running and testing the Centrifugal pump in pump mode which is the power input of the pump, the method adopted by Henggeler et. al. (2005) was used.

This Volumetric method can be used to calculate Petrol rate (P_R) which in turn is also the power input by measuring the gross changes in bulk volume over a longer period of time. This is done by calculating the amount of petrol used by the centrifugal pump during a set duration of one hour (60 minutes)

This is achieved by dipping the current surface level of the petrol inside the tank with a clean meter rule, the level is marked and recorded. After doing this the centrifugal pump was switched on and immediately the stop watch was started. The centrifugal pump was allowed to run for one hour at a particular speed (rpm). The flow rate was than measured. This procedure was repeated six different times at different speed (rpm). After the end of every hour of running the test the meter rule was dipped inside the tank of the centrifugal pump and the new level was marked and recorded both on the meter rule and on the tank. Noting that the tank of the centrifugal pump which is always cubic shaped without graduated markings, there was a need to calculate the liter of petrol inside the tank based on tank length, diameter and the depth of fuel surface.

The volume of petrol in liter inside the tank of the centrifugal pump at any instance is given by,

$$Vol_p = \frac{a}{A}\ 137 \cdot 2\ LD^2 \tag{2.2}$$

The quantity of petrol used during the time period is then the difference in liters $(\Delta\, Vol_p)$ as determined by equation (2.3) calculated at the end of the period versus what it was at the start of the period. To turn these volumetric amounts into Petrol consumption rate $P_R$the difference in volume $(\Delta\, Vol_p)$ was divided by the additional clocked hours on the gauge that was first marked down from the original amount. Equation (2.3) calculates the petrol consumption rate P_R for this period. (Henggeler et.al. 2005)

$$P_{in} = \frac{137 \cdot 2\ LD^2\left(\left[\frac{a}{A}\right]_S - \left[\frac{a}{A}\right]_E\right)}{T_S - T_E} \tag{2.3}$$

iii. *Determination of Speed*

The speed was measured (in rpm) with an optical electronic hand held tachometer. The tachometer was place at the end of the pump shaft so the reading could be taken accurately.

iv. *Determination of Power Output*

The method of Henggeler et. al. (2005) to calculate the power output $(P_{out})$of the centrifugal pump in pump mode test was adopted. The generated water horsepower was used as the power output(P_{out}). It was calculated from equation 2.4

$$P_{out} = \frac{S_{(rpm)}(PWL + H_f + [1 \cdot 84 \times O.P])}{3960} \tag{2.4}$$

v. *Determination of Pressure*

A manometer and orifice meter was used to measure the pressure. They were mounted on the discharge pipe few distance away from each other and the readings was recorded.

vi. *Determination of Efficiency*

The process used by Raman et al. (2013) was adopted to determine the pump efficiency. From equation 2.5

$$\eta = \frac{P_{out}}{P_{in}} \times 100\% \tag{2.5}$$

- *Effect of Speed on Efficiency of the Pump*

The variation of the pump speed with its efficiency is shown in Figure 3.1. This shows the measure of the effectiveness of a machine in transferring energy and power expressed by the ratio of the device's output per its input. (Nautiyal *et al*. 2011).

© 2021 Global Journals

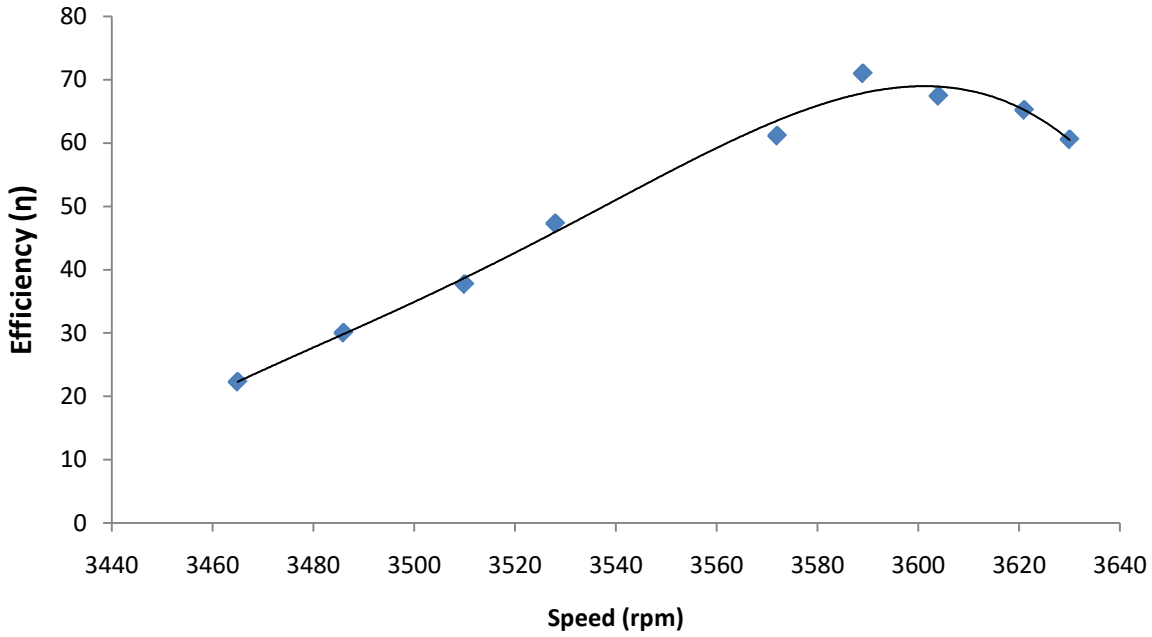

Figure 3.1: Effect of Pump Speed on the Efficiency of the Pump

Figure 3.1 is a curvilinear and portrays the fact that as speed of the pump increases the efficiency of the pump also increases, at the maximum speed at which the pump was run (3589 rpm), the best efficiency point (BEP) of the pump was$70 \cdot 98\%$. This is the point at which the pump gave its best performance. Jose (2010) obtained much lower efficiency 44% possibly due to hydraulic losses associated with the type of centrifugal pump he used.

The regression analysis shows that the P-value is 0.000012, (Table 17 Appendix C), indicating the model is significant at 95% confidence level. From the coefficients, the efficiency increased by 0.385 for every one point increase in the speed (Equation 3.1). With R^2 value of 0.9919, the model (Equation 3.1) is a good fit to the data.;

$$y = -2E-07x^4 + 0.0025x^3 - 13\,421x^2 + 31400x - 3E+07 \quad (3.1)$$

c) Effect of Efficiency on Flow Rate (Pump)

Figure 3.2 portrays the variation of efficiency with flow rate. From Figure 3.2, it is clear that the higher the flow rate, the higher the efficiency of the pump as reported in the literature (Fernandez *et al*. 2004).

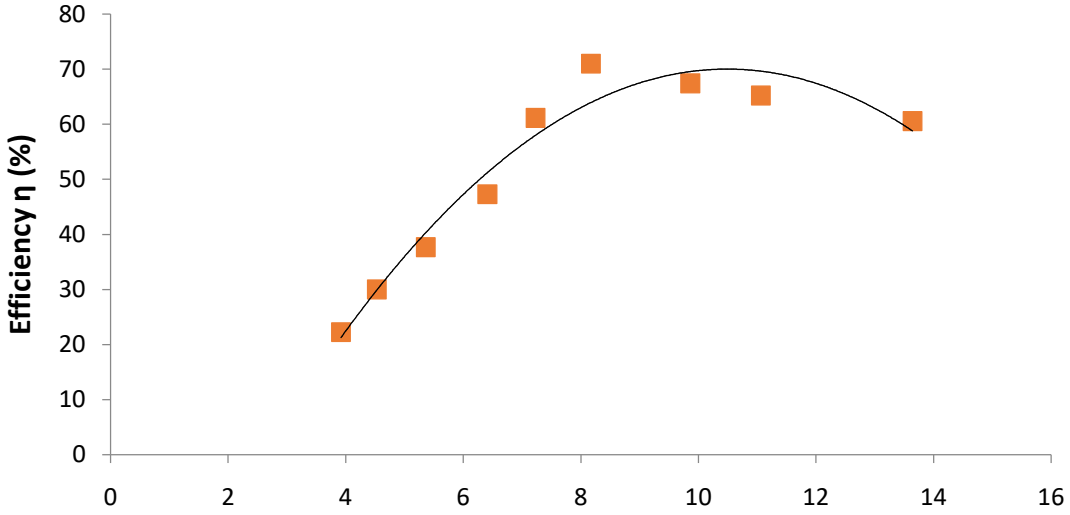

Figure 3. 2: Effect of Flow rate on the Efficiency of the Pump

© 2021 Global Journals

The maximum flow rate of the pump mode was $8 \cdot 7 m^3/s$ because increasing flow rate during pump mode test led to lower pressure of the fluid at the suction part of the pump which caused formation of bubbles and thereby allowed cavitation in the pump as observed by Teuteberg (2010) and Nautiyal *et al*. (2011) From the regression analysis, (appendix Table 18), R^2 value is 0.9564, which shows a good fit to the data as $98 \cdot 9\%$ of the experimental data is explained by the model (Equation 3.2). The P-value is $0 \cdot 01306$ it is significant and has a good relation between flow rate and efficiency. For the coefficient; the efficiency increases by $11 \cdot 430$ for every one point increase in power input. The intercept is $-23 \cdot 183$.

$$y = -1.1296x^2 + 23.695x - 54.258 \quad (3.2)$$

d) Effect of the pump Fuel Consumption on Efficiency

Figure 3.3 portrays the variation of efficiency with fuel level. It shows clearly that as the speed (rpm) of the pump increases the flow rate also increases causing the rate of fuel consumption to increase thereby bringing about increased drop in the fuel level in the tank of the centrifugal pump.

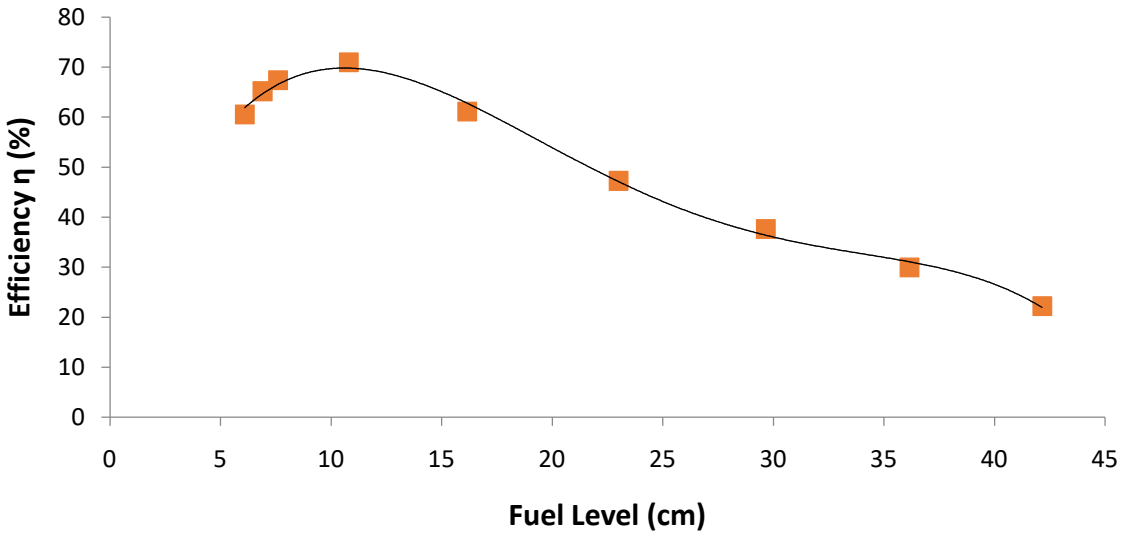

Figure 3. 3: Variations of Fuel Level with Efficiency

Figure 3.3 also indicates a trend curve that shows that the efficiency is indirectly proportional to the level of fuel in the tank. This agrees with Henggeler *et al*. (2005).

In the regression analysis (appendix Table 19), P-value is 0.00000122, this indicates the significance of the model at a confidence level of 96%. From the coefficient; the efficiency decreased by -1.487 for every one point increase in fuel level (Equation 3.3). The R^2 value is 0.993, the model (Equation 3.3) is a good fit to the data.

$$y=-0.0003x^4+0.0271x^3-1.0031x^2+13.341x+12.083 \quad (3.3)$$

e) Effect of Efficiency on Pump Power Input

Figure 3.4 portrays the variation of efficiency with Power input. Figure 3.4 demonstrates that efficiency was increasing as the power input was also increasing. This result agrees with the work of Westra (2008) and Raman and Hussein (2009).

© 2021 Global Journals

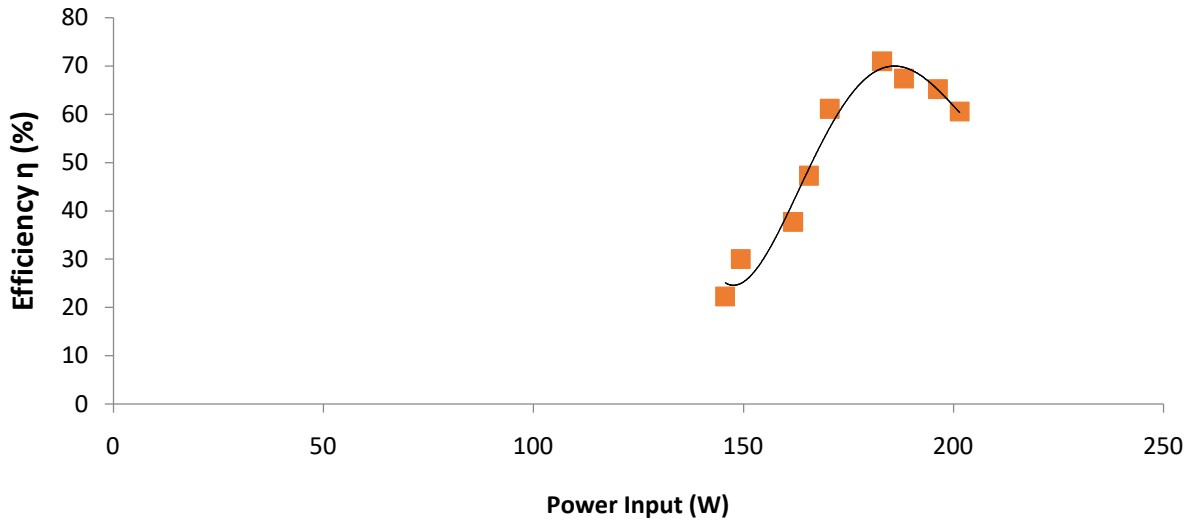

Figure 3.4: Effect of Power Input on the Efficiency of the Pump

At the maximum efficiency of $70 \cdot 98\%$, the power input was $180W$, and at the minimum efficiency of $22 \cdot 27\%$ the power input was $147 \cdot 67\text{W}$. This result also agrees with that of Rusovs (2002) and Westra (2008).

From the regression analysis (appendix Table 20), R^2 value of 0.9701, shows a good fit of the model (Equation 3.4) to the data. It shows that $95 \cdot 2\%$ of the experimental data is explained by the model (Equation 3.4). The P-value of $0 \cdot 00198$ shows that the model in accounting for the experimental data is significant. From the coefficient; the efficiency increases by $1 \cdot 404$ for every $1W$ increase in power input.

$$\text{y} = 3\text{E} - 05\text{x}^4 - 0.0194\text{x}^3 + 5.2425\text{x}^2 - 621.4\text{x} + 27327 \quad (3.4)$$

f) Effect of Power Output on the Pump Efficiency

Figure 5 shows that the efficiency is directly proportional to the pump power output. At the peak power output of $129.91W$, the efficiency of the pump was $70 \cdot 98\%$.

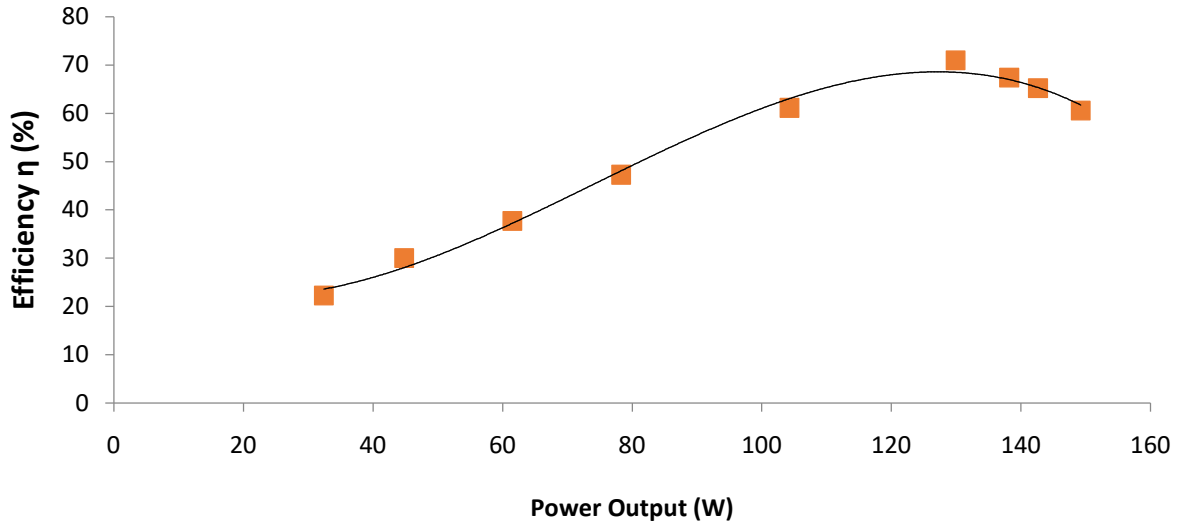

Figure 3.5: Effect of Power Output on Efficiency of the pump

This characteristic curve proves that the higher the fluid discharge rate the higher the power output and this gives a corresponding better efficiency of the pump. This result agrees with that reported by Nuatiyal *et al*. (2011) and Teuteberg (2010).

From the regression analysis (appendix Table 21), R^2 value is 0.9929, which shows a good fit to the data as $99 \cdot 6\%$ of the experimental data is explained by the model (Equation 3.5). The P-value is $0 \cdot 00607$ it is significant and has a good relation between power output and efficiency. From the coefficient; the efficiency increases by $0 \cdot 5047$ for every one point increase in the power output.

$$y = -8E - 05x^3 + 0.017x^2 - 0.6271x + 28.352 \quad (3.5)$$

© 2021 Global Journals

g) Effect of Flow Rate on Power Output (Pump)

Figure 3.6 shows that the power generated is proportion to the flow rate, in agreement with the result obtained by Raman *et al*. (2013).

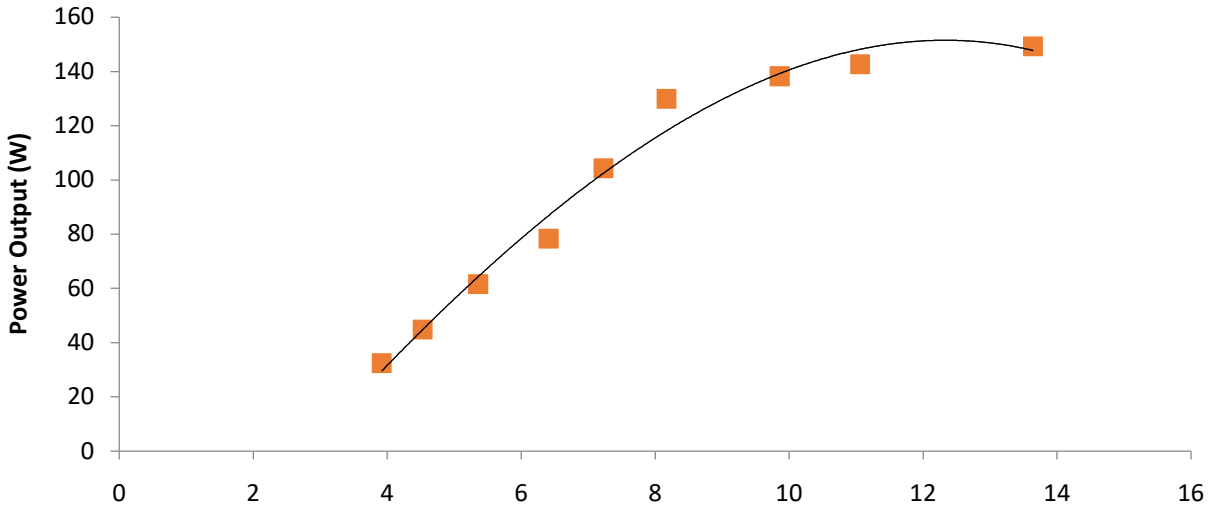

Figure 3.6: Effect of flow rate on Power Output of the pump

Six different flow rate values were used to obtain flow characteristics in the test pump. The flow rate was changed from $3 \cdot 92\, m^3/s$ *to* $8 \cdot 17\, m^3/s$at different speed (rpm) of the pump. The optimal rate of flow was $8 \cdot 17\, m^3/s$which was the peak since the graph gave a curvilinear (Figure 3.6). Figures 3.2, 3.3 and 3.6, show that the characteristic curves from this work are in conformity with the results obtained by Raman and Hussein (2009).

References Références Referencias

1. Fernandez, J., Blanco, E., Parrondo, J., Stickland, M.T. and Scanlon, T.J. (2004) Performance of a centrifugal pump running in inverse mode. Proceedings of the Institution of Mechanical Engineers, Part A: Journal of Power and Energy, 218 (4). pp. 265-271.
2. Henggeler J. Henry C. and Nicholes K. (2005) Measuring Fuel Consumption to Estimate Engine Efficiency
3. He Zhang.(2011) Optimal Sizing And Operation of Pumping Systems To Achieve Energy Efficiency And Load Shifting. PhD. Thesis, University of Pretoria, South Africa.16-17pp, 22pp.
4. Jose David V.J. (2010) Numerical Simulations On A Centrifugal Pump Operating In Turbine Mode. PhD. Thesis, Eafit University Engineering School, Medellin, Colombia.23-27pp.
5. Karassik I., Messina J., Cooper P. and Heald C. (2008). Pump Handbook 4 ed. New York: McGraw Hill, 542 pp.
6. Mohd Azlan Ismail, Al Khalid Othman, Shahidul Islam, and Hushairi Zen (2014).End Suction Centrifugal Pump Operating in Turbine Mode for Microhydro Applications, Review Article. Hindawi Publishing Corporation Advances in Mechanical Engineering Volume 2014, Article ID 139868, 7 pages http://dx.doi.org/10.1155/2014/139868.
7. Nautiyal H. Varun, Kumar A. and Yadav S. (2011) Experimental investigation of centrifugal pump working as Turbine for Small Hydropower System. Energy Science and Technology, Vol.1, No.1, pp. 79-86.
8. Raman N. and Hussein I, (2009).Micro Hydro Potential at Sg. Sering, Keraboi, Region, Jelebu, Negeri, Sambilan International Seminar on Advances in Renewable Energy.(ISARE 2009) 27-29 April 2009 University Tenaga Nasional.
9. Raman N. Hussein I. Palanisamy G. and Foo B.(2013). An experimental Investigation of Pump as Turbine for Micro Hydro Application. The 4th International Conference on Energy and Environment, IOP Conference Series; Earth and Environmental Science 16.
10. Rusovs D. (2002). Pump Application As Hydraulic Turbine-Pump As Turbine (PAT), Lapasgalvani (header) atstajneizmatotu.
11. Singh P., (2005) Optimization of the Internal Hydraulic and of System Design in Pumps as turbines with Field Implementation and EvaluationⅡ, PhD Thesis, University of Karlsruhe, Germany.
12. Tanbhir. Hoq, Nawshad U. A., N. Islam, Ibnea Sina, K. Syfullah, Raiyan Rahman, (2011) "Micro Hydro Power: Promising Solution for Off-grid Renewable Energy Source ", International Journal of Scientific & Engineering Research, Volume 2, Issue 12,

© 2021 Global Journals

December-2011 1 ISSN 2229-5518 IJSER © 2011 http://www.ijser.org
13. Teuteberg B.H. (2010)Design of a Pump-As-Turbine Microhydro System for an Abalone Farm; PhD Thesis, Stellenbosch University South Africa
14. Westra R.W. (2008), Inverse-design and optimization methods for centrifugal pump impellers. PhD. Thesis, University of Twente, Enschede, Netherland. 34pp.

© 2021 Global Journals

Global Journals Guidelines Handbook 2021

www.GlobalJournals.org

Memberships

Fellows/Associates of Science Frontier Research Council

FSFRC/ASFRC Memberships



Introduction

FSFRC/ASFRC is the most prestigious membership of Global Journals accredited by Open Association of Research Society, U.S.A (OARS). The credentials of Fellow and Associate designations signify that the researcher has gained the knowledge of the fundamental and high-level concepts, and is a subject matter expert, proficient in an expertise course covering the professional code of conduct, and follows recognized standards of practice. The credentials are designated only to the researchers, scientists, and professionals that have been selected by a rigorous process by our Editorial Board and Management Board.

Associates of FSFRC/ASFRC are scientists and researchers from around the world are working on projects/researches that have huge potentials. Members support Global Journals' mission to advance technology for humanity and the profession.

FSFRC

Fellow of Science Frontier Research Council

FELLOW OF SCIENCE FRONTIER RESEARCH COUNCIL is the most prestigious membership of Global Journals. It is an award and membership granted to individuals that the Open Association of Research Society judges to have made a 'substantial contribution to the improvement of computer science, technology, and electronics engineering.

The primary objective is to recognize the leaders in research and scientific fields of the current era with a global perspective and to create a channel between them and other researchers for better exposure and knowledge sharing. Members are most eminent scientists, engineers, and technologists from all across the world. Fellows are elected for life through a peer review process on the basis of excellence in the respective domain. There is no limit on the number of new nominations made in any year. Each year, the Open Association of Research Society elect up to 12 new Fellow Members.

Benefit

To the institution

Get letter of appreciation

Global Journals sends a letter of appreciation of author to the Dean or CEO of the University or Company of which author is a part, signed by editor in chief or chief author.



Exclusive Network

Get access to a closed network

A FSFRC member gets access to a closed network of Tier 1 researchers and scientists with direct communication channel through our website. Fellows can reach out to other members or researchers directly. They should also be open to reaching out by other.

Career | Credibility | Exclusive | Reputation



Certificate

Receive a print ed copy of a certificate

Fellows receive a printed copy of a certificate signed by our Chief Author that may be used for academic purposes and a personal recommendation letter to the dean of member's university.

Career | Credibility | Exclusive | Reputation



Designation

Get honored title of membership

Fellows can use the honored title of membership. The “FSFRC” is an honored title which is accorded to a person’s name viz. Dr. John E. Hall, Ph.D., FSFRC or William Walldroff, M.S., FSFRC.

Career | Credibility | Exclusive | Reputation

Recognition on the Platform

Better visibility and citation

All the Fellow members of FSFRC get a badge of "Leading Member of Global Journals" on the Research Community that distinguishes them from others. Additionally, the profile is also partially maintained by our team for better visibility and citation. All fellows get a dedicated page on the website with their biography.

Career | Credibility | Reputation

© Copyright by Global Journals | Guidelines Handbook

Future Work

Get discounts on the future publications

Fellows receive discounts on future publications with Global Journals up to 60%. Through our recommendation programs, members also receive discounts on publications made with OARS affiliated organizations.

Career | Financial



GJ Internal Account

Unlimited forward of Emails

Fellows get secure and fast GJ work emails with unlimited forward of emails that they may use them as their primary email. For example,
john [AT] globaljournals [DOT] org.

Career | Credibility | Reputation



Premium Tools

Access to all the premium tools

To take future researches to the zenith, fellows and associates receive access to all the premium tools that Global Journals have to offer along with the partnership with some of the best marketing leading tools out there.

Financial

Conferences & Events

Organize seminar/conference

Fellows are authorized to organize symposium/seminar/conference on behalf of Global Journal Incorporation (USA). They can also participate in the same organized by another institution as representative of Global Journal. In both the cases, it is mandatory for him to discuss with us and obtain our consent. Additionally, they get free research conferences (and others) alerts.

Career | Credibility | Financial

Early Invitations

Early invitations to all the symposiums, seminars, conferences

All fellows receive the early invitations to all the symposiums, seminars, conferences and webinars hosted by Global Journals in their subject.

Exclusive



Publishing Articles & Books

Earn 60% of sales proceeds

Fellows can publish articles (limited) without any fees. Also, they can earn up to 60% of sales proceeds from the sale of reference/review books/literature/ publishing of research paper. The FSFRC member can decide its price and we can help in making the right decision.

Exclusive | Financial

Reviewers

Get a remuneration of 15% of author fees

Fellow members are eligible to join as a paid peer reviewer at Global Journals Incorporation (USA) and can get a remuneration of 15% of author fees, taken from the author of a respective paper.

Financial

Access to Editorial Board

Become a member of the Editorial Board

Fellows may join as a member of the Editorial Board of Global Journals Incorporation (USA) after successful completion of three years as Fellow and as Peer Reviewer. Additionally, Fellows get a chance to nominate other members for Editorial Board.

Career | Credibility | Exclusive | Reputation

And Much More

Get access to scientific museums and observatories across the globe

All members get access to 5 selected scientific museums and observatories across the globe. All researches published with Global Journals will be kept under deep archival facilities across regions for future protections and disaster recovery. They get 10 GB free secure cloud access for storing research files.

ASSOCIATE OF SCIENCE FRONTIER RESEARCH COUNCIL

ASSOCIATE OF SCIENCE FRONTIER RESEARCH COUNCIL is the membership of Global Journals awarded to individuals that the Open Association of Research Society judges to have made a 'substantial contribution to the improvement of computer science, technology, and electronics engineering.

The primary objective is to recognize the leaders in research and scientific fields of the current era with a global perspective and to create a channel between them and other researchers for better exposure and knowledge sharing. Members are most eminent scientists, engineers, and technologists from all across the world. Associate membership can later be promoted to Fellow Membership. Associates are elected for life through a peer review process on the basis of excellence in the respective domain. There is no limit on the number of new nominations made in any year. Each year, the Open Association of Research Society elect up to 12 new Associate Members.

To the institution

Get letter of appreciation

Global Journals sends a letter of appreciation of author to the Dean or CEO of the University or Company of which author is a part, signed by editor in chief or chief author.



Exclusive Network

Get access to a closed network

A ASFRC member gets access to a closed network of Tier 1 researchers and scientists with direct communication channel through our website. Associates can reach out to other members or researchers directly. They should also be open to reaching out by other.

Career | Credibility | Exclusive | Reputation



Certificate

Receive a print ed copy of a certificate

Associates receive a printed copy of a certificate signed by our Chief Author that may be used for academic purposes and a personal recommendation letter to the dean of member's university.

Career | Credibility | Exclusive | Reputation



Designation

Get honored title of membership

Associates can use the honored title of membership. The “ASFRC” is an honored title which is accorded to a person’s name viz. Dr. John E. Hall, Ph.D., ASFRC or William Walldroff, M.S., ASFRC.

Career | Credibility | Exclusive | Reputation

Recognition on the Platform

Better visibility and citation

All the Associate members of ASFRC get a badge of "Leading Member of Global Journals" on the Research Community that distinguishes them from others. Additionally, the profile is also partially maintained by our team for better visibility and citation. All associates get a dedicated page on the website with their biography.

Career | Credibility | Reputation

© Copyright by Global Journals | Guidelines Handbook

Future Work

Get discounts on the future publications

Associates receive discounts on the future publications with Global Journals up to 60%. Through our recommendation programs, members also receive discounts on publications made with OARS affiliated organizations.

Career | Financial



GJ Internal Account

Unlimited forward of Emails

Associates get secure and fast GJ work emails with unlimited forward of emails that they may use them as their primary email. For example,
john [AT] globaljournals [DOT] org.

Career | Credibility | Reputation



Premium Tools

Access to all the premium tools

To take future researches to the zenith, fellows receive access to almost all the premium tools that Global Journals have to offer along with the partnership with some of the best marketing leading tools out there.

Financial

Conferences & Events

Organize seminar/conference

Associates are authorized to organize symposium/seminar/conference on behalf of Global Journal Incorporation (USA). They can also participate in the same organized by another institution as representative of Global Journal. In both the cases, it is mandatory for him to discuss with us and obtain our consent. Additionally, they get free research conferences (and others) alerts.

Career | Credibility | Financial

Early Invitations

Early invitations to all the symposiums, seminars, conferences

All associates receive the early invitations to all the symposiums, seminars, conferences and webinars hosted by Global Journals in their subject.

Exclusive



Publishing Articles & Books

Earn 30-40% of sales proceeds

Associates can publish articles (limited) without any fees. Also, they can earn up to 30-40% of sales proceeds from the sale of reference/review books/literature/publishing of research paper.

Exclusive | Financial

Reviewers

Get a remuneration of 15% of author fees

Associate members are eligible to join as a paid peer reviewer at Global Journals Incorporation (USA) and can get a remuneration of 15% of author fees, taken from the author of a respective paper.

Financial

And Much More

Get access to scientific museums and observatories across the globe

All members get access to 2 selected scientific museums and observatories across the globe. All researches published with Global Journals will be kept under deep archival facilities across regions for future protections and disaster recovery. They get 5 GB free secure cloud access for storing research files.

Associate	Fellow	Research Group	Basic
$4800 **lifetime designation**	$6800 **lifetime designation**	$12500.00 **organizational**	APC **per article**
Certificate, LoR and Momento **2** discounted publishing/year **Gradation** of Research **10** research contacts/day **1 GB** Cloud Storage **GJ** Community Access	**Certificate,** LoR and Momento **Unlimited** discounted publishing/year **Gradation** of Research **Unlimited** research contacts/day **5 GB** Cloud Storage **Online Presense** Assistance **GJ** Community Access	**Certificates,** LoRs and Momentos **Unlimited** free publishing/year **Gradation** of Research **Unlimited** research contacts/day **Unlimited** Cloud Storage **Online Presense** Assistance **GJ** Community Access	**GJ** Community Access

Preferred Author Guidelines

We accept the manuscript submissions in any standard (generic) format.

We typeset manuscripts using advanced typesetting tools like Adobe In Design, CorelDraw, TeXnicCenter, and TeXStudio. We usually recommend authors submit their research using any standard format they are comfortable with, and let Global Journals do the rest.

Alternatively, you can download our basic template from https://globaljournals.org/Template.zip

Authors should submit their complete paper/article, including text illustrations, graphics, conclusions, artwork, and tables. Authors who are not able to submit manuscript using the form above can email the manuscript department at submit@globaljournals.org or get in touch with chiefeditor@globaljournals.org if they wish to send the abstract before submission.

Before and during Submission

Authors must ensure the information provided during the submission of a paper is authentic. Please go through the following checklist before submitting:

1. Authors must go through the complete author guideline and understand and *agree to Global Journals' ethics and code of conduct,* along with author responsibilities.
2. Authors must accept the privacy policy, terms, and conditions of Global Journals.
3. Ensure corresponding author's email address and postal address are accurate and reachable.
4. Manuscript to be submitted must include keywords, an abstract, a paper title, co-author(s') names and details (email address, name, phone number, and institution), figures and illustrations in vector format including appropriate captions, tables, including titles and footnotes, a conclusion, results, acknowledgments and references.
5. Authors should submit paper in a ZIP archive if any supplementary files are required along with the paper.
6. Proper permissions must be acquired for the use of any copyrighted material.
7. Manuscript submitted *must not have been submitted or published elsewhere* and all authors must be aware of the submission.

Declaration of Conflicts of Interest

It is required for authors to declare all financial, institutional, and personal relationships with other individuals and organizations that could influence (bias) their research.

Policy on Plagiarism

Plagiarism is not acceptable in Global Journals submissions at all.

Plagiarized content will not be considered for publication. We reserve the right to inform authors' institutions about plagiarism detected either before or after publication. If plagiarism is identified, we will follow COPE guidelines:

Authors are solely responsible for all the plagiarism that is found. The author must not fabricate, falsify or plagiarize existing research data. The following, if copied, will be considered plagiarism:

- Words (language)
- Ideas
- Findings
- Writings
- Diagrams
- Graphs
- Illustrations
- Lectures

- Printed material
- Graphic representations
- Computer programs
- Electronic material
- Any other original work

Authorship Policies

Global Journals follows the definition of authorship set up by the Open Association of Research Society, USA. According to its guidelines, authorship criteria must be based on:

1. Substantial contributions to the conception and acquisition of data, analysis, and interpretation of findings.
2. Drafting the paper and revising it critically regarding important academic content.
3. Final approval of the version of the paper to be published.

Changes in Authorship

The corresponding author should mention the name and complete details of all co-authors during submission and in manuscript. We support addition, rearrangement, manipulation, and deletions in authors list till the early view publication of the journal. We expect that corresponding author will notify all co-authors of submission. We follow COPE guidelines for changes in authorship.

Copyright

During submission of the manuscript, the author is confirming an exclusive license agreement with Global Journals which gives Global Journals the authority to reproduce, reuse, and republish authors' research. We also believe in flexible copyright terms where copyright may remain with authors/employers/institutions as well. Contact your editor after acceptance to choose your copyright policy. You may follow this form for copyright transfers.

Appealing Decisions

Unless specified in the notification, the Editorial Board's decision on publication of the paper is final and cannot be appealed before making the major change in the manuscript.

Acknowledgments

Contributors to the research other than authors credited should be mentioned in Acknowledgments. The source of funding for the research can be included. Suppliers of resources may be mentioned along with their addresses.

Declaration of funding sources

Global Journals is in partnership with various universities, laboratories, and other institutions worldwide in the research domain. Authors are requested to disclose their source of funding during every stage of their research, such as making analysis, performing laboratory operations, computing data, and using institutional resources, from writing an article to its submission. This will also help authors to get reimbursements by requesting an open access publication letter from Global Journals and submitting to the respective funding source.

Preparing your Manuscript

Authors can submit papers and articles in an acceptable file format: MS Word (doc, docx), LaTeX (.tex, .zip or .rar including all of your files), Adobe PDF (.pdf), rich text format (.rtf), simple text document (.txt), Open Document Text (.odt), and Apple Pages (.pages). Our professional layout editors will format the entire paper according to our official guidelines. This is one of the highlights of publishing with Global Journals—authors should not be concerned about the formatting of their paper. Global Journals accepts articles and manuscripts in every major language, be it Spanish, Chinese, Japanese, Portuguese, Russian, French, German, Dutch, Italian, Greek, or any other national language, but the title, subtitle, and abstract should be in English. This will facilitate indexing and the pre-peer review process.

The following is the official style and template developed for publication of a research paper. Authors are not required to follow this style during the submission of the paper. It is just for reference purposes.

Manuscript Style Instruction (Optional)

- Microsoft Word Document Setting Instructions.
- Font type of all text should be Swis721 Lt BT.
- Page size: 8.27" x 11'", left margin: 0.65, right margin: 0.65, bottom margin: 0.75.
- Paper title should be in one column of font size 24.
- Author name in font size of 11 in one column.
- Abstract: font size 9 with the word "Abstract" in bold italics.
- Main text: font size 10 with two justified columns.
- Two columns with equal column width of 3.38 and spacing of 0.2.
- First character must be three lines drop-capped.
- The paragraph before spacing of 1 pt and after of 0 pt.
- Line spacing of 1 pt.
- Large images must be in one column.
- The names of first main headings (Heading 1) must be in Roman font, capital letters, and font size of 10.
- The names of second main headings (Heading 2) must not include numbers and must be in italics with a font size of 10.

Structure and Format of Manuscript

The recommended size of an original research paper is under 15,000 words and review papers under 7,000 words. Research articles should be less than 10,000 words. Research papers are usually longer than review papers. Review papers are reports of significant research (typically less than 7,000 words, including tables, figures, and references)

A research paper must include:

a) A title which should be relevant to the theme of the paper.
b) A summary, known as an abstract (less than 150 words), containing the major results and conclusions.
c) Up to 10 keywords that precisely identify the paper's subject, purpose, and focus.
d) An introduction, giving fundamental background objectives.
e) Resources and techniques with sufficient complete experimental details (wherever possible by reference) to permit repetition, sources of information must be given, and numerical methods must be specified by reference.
f) Results which should be presented concisely by well-designed tables and figures.
g) Suitable statistical data should also be given.
h) All data must have been gathered with attention to numerical detail in the planning stage.

Design has been recognized to be essential to experiments for a considerable time, and the editor has decided that any paper that appears not to have adequate numerical treatments of the data will be returned unrefereed.

i) Discussion should cover implications and consequences and not just recapitulate the results; conclusions should also be summarized.
j) There should be brief acknowledgments.
k) There ought to be references in the conventional format. Global Journals recommends APA format.

Authors should carefully consider the preparation of papers to ensure that they communicate effectively. Papers are much more likely to be accepted if they are carefully designed and laid out, contain few or no errors, are summarizing, and follow instructions. They will also be published with much fewer delays than those that require much technical and editorial correction.

The Editorial Board reserves the right to make literary corrections and suggestions to improve brevity.



Format Structure

It is necessary that authors take care in submitting a manuscript that is written in simple language and adheres to published guidelines.

All manuscripts submitted to Global Journals should include:

Title

The title page must carry an informative title that reflects the content, a running title (less than 45 characters together with spaces), names of the authors and co-authors, and the place(s) where the work was carried out.

Author details

The full postal address of any related author(s) must be specified.

Abstract

The abstract is the foundation of the research paper. It should be clear and concise and must contain the objective of the paper and inferences drawn. It is advised to not include big mathematical equations or complicated jargon.

Many researchers searching for information online will use search engines such as Google, Yahoo or others. By optimizing your paper for search engines, you will amplify the chance of someone finding it. In turn, this will make it more likely to be viewed and cited in further works. Global Journals has compiled these guidelines to facilitate you to maximize the web-friendliness of the most public part of your paper.

Keywords

A major lynchpin of research work for the writing of research papers is the keyword search, which one will employ to find both library and internet resources. Up to eleven keywords or very brief phrases have to be given to help data retrieval, mining, and indexing.

One must be persistent and creative in using keywords. An effective keyword search requires a strategy: planning of a list of possible keywords and phrases to try.

Choice of the main keywords is the first tool of writing a research paper. Research paper writing is an art. Keyword search should be as strategic as possible.

One should start brainstorming lists of potential keywords before even beginning searching. Think about the most important concepts related to research work. Ask, “What words would a source have to include to be truly valuable in a research paper?” Then consider synonyms for the important words.

It may take the discovery of only one important paper to steer in the right keyword direction because, in most databases, the keywords under which a research paper is abstracted are listed with the paper.

Numerical Methods

Numerical methods used should be transparent and, where appropriate, supported by references.

Abbreviations

Authors must list all the abbreviations used in the paper at the end of the paper or in a separate table before using them.

Formulas and equations

Authors are advised to submit any mathematical equation using either MathJax, KaTeX, or LaTeX, or in a very high-quality image.

Tables, Figures, and Figure Legends

Tables: Tables should be cautiously designed, uncrowned, and include only essential data. Each must have an Arabic number, e.g., Table 4, a self-explanatory caption, and be on a separate sheet. Authors must submit tables in an editable format and not as images. References to these tables (if any) must be mentioned accurately.

Figures

Figures are supposed to be submitted as separate files. Always include a citation in the text for each figure using Arabic numbers, e.g., Fig. 4. Artwork must be submitted online in vector electronic form or by emailing it.

Preparation of Eletronic Figures for Publication

Although low-quality images are sufficient for review purposes, print publication requires high-quality images to prevent the final product being blurred or fuzzy. Submit (possibly by e-mail) EPS (line art) or TIFF (halftone/ photographs) files only. MS PowerPoint and Word Graphics are unsuitable for printed pictures. Avoid using pixel-oriented software. Scans (TIFF only) should have a resolution of at least 350 dpi (halftone) or 700 to 1100 dpi (line drawings). Please give the data for figures in black and white or submit a Color Work Agreement form. EPS files must be saved with fonts embedded (and with a TIFF preview, if possible).

For scanned images, the scanning resolution at final image size ought to be as follows to ensure good reproduction: line art: >650 dpi; halftones (including gel photographs): >350 dpi; figures containing both halftone and line images: >650 dpi.

Color charges: Authors are advised to pay the full cost for the reproduction of their color artwork. Hence, please note that if there is color artwork in your manuscript when it is accepted for publication, we would require you to complete and return a Color Work Agreement form before your paper can be published. Also, you can email your editor to remove the color fee after acceptance of the paper.

Tips for Writing a Good Quality Science Frontier Research Paper

Techniques for writing a good quality Science Frontier Research paper:

1. Choosing the topic: In most cases, the topic is selected by the interests of the author, but it can also be suggested by the guides. You can have several topics, and then judge which you are most comfortable with. This may be done by asking several questions of yourself, like "Will I be able to carry out a search in this area? Will I find all necessary resources to accomplish the search? Will I be able to find all information in this field area?" If the answer to this type of question is "yes," then you ought to choose that topic. In most cases, you may have to conduct surveys and visit several places. Also, you might have to do a lot of work to find all the rises and falls of the various data on that subject. Sometimes, detailed information plays a vital role, instead of short information. Evaluators are human: The first thing to remember is that evaluators are also human beings. They are not only meant for rejecting a paper. They are here to evaluate your paper. So present your best aspect.

2. Think like evaluators: If you are in confusion or getting demotivated because your paper may not be accepted by the evaluators, then think, and try to evaluate your paper like an evaluator. Try to understand what an evaluator wants in your research paper, and you will automatically have your answer. Make blueprints of paper: The outline is the plan or framework that will help you to arrange your thoughts. It will make your paper logical. But remember that all points of your outline must be related to the topic you have chosen.

3. Ask your guides: If you are having any difficulty with your research, then do not hesitate to share your difficulty with your guide (if you have one). They will surely help you out and resolve your doubts. If you can't clarify what exactly you require for your work, then ask your supervisor to help you with an alternative. He or she might also provide you with a list of essential readings.

4. Use of computer is recommended: As you are doing research in the field of science frontier then this point is quite obvious. Use right software: Always use good quality software packages. If you are not capable of judging good software, then you can lose the quality of your paper unknowingly. There are various programs available to help you which you can get through the internet.

5. Use the internet for help: An excellent start for your paper is using Google. It is a wondrous search engine, where you can have your doubts resolved. You may also read some answers for the frequent question of how to write your research paper or find a model research paper. You can download books from the internet. If you have all the required books, place importance on reading, selecting, and analyzing the specified information. Then sketch out your research paper. Use big pictures: You may use encyclopedias like Wikipedia to get pictures with the best resolution. At Global Journals, you should strictly follow here.



© Copyright by Global Journals | Guidelines Handbook

6. Bookmarks are useful: When you read any book or magazine, you generally use bookmarks, right? It is a good habit which helps to not lose your continuity. You should always use bookmarks while searching on the internet also, which will make your search easier.

7. Revise what you wrote: When you write anything, always read it, summarize it, and then finalize it.

8. Make every effort: Make every effort to mention what you are going to write in your paper. That means always have a good start. Try to mention everything in the introduction—what is the need for a particular research paper. Polish your work with good writing skills and always give an evaluator what he wants. Make backups: When you are going to do any important thing like making a research paper, you should always have backup copies of it either on your computer or on paper. This protects you from losing any portion of your important data.

9. Produce good diagrams of your own: Always try to include good charts or diagrams in your paper to improve quality. Using several unnecessary diagrams will degrade the quality of your paper by creating a hodgepodge. So always try to include diagrams which were made by you to improve the readability of your paper. Use of direct quotes: When you do research relevant to literature, history, or current affairs, then use of quotes becomes essential, but if the study is relevant to science, use of quotes is not preferable.

10. Use proper verb tense: Use proper verb tenses in your paper. Use past tense to present those events that have happened. Use present tense to indicate events that are going on. Use future tense to indicate events that will happen in the future. Use of wrong tenses will confuse the evaluator. Avoid sentences that are incomplete.

11. Pick a good study spot: Always try to pick a spot for your research which is quiet. Not every spot is good for studying.

12. Know what you know: Always try to know what you know by making objectives, otherwise you will be confused and unable to achieve your target.

13. Use good grammar: Always use good grammar and words that will have a positive impact on the evaluator; use of good vocabulary does not mean using tough words which the evaluator has to find in a dictionary. Do not fragment sentences. Eliminate one-word sentences. Do not ever use a big word when a smaller one would suffice.

Verbs have to be in agreement with their subjects. In a research paper, do not start sentences with conjunctions or finish them with prepositions. When writing formally, it is advisable to never split an infinitive because someone will (wrongly) complain. Avoid clichés like a disease. Always shun irritating alliteration. Use language which is simple and straightforward. Put together a neat summary.

14. Arrangement of information: Each section of the main body should start with an opening sentence, and there should be a changeover at the end of the section. Give only valid and powerful arguments for your topic. You may also maintain your arguments with records.

15. Never start at the last minute: Always allow enough time for research work. Leaving everything to the last minute will degrade your paper and spoil your work.

16. Multitasking in research is not good: Doing several things at the same time is a bad habit in the case of research activity. Research is an area where everything has a particular time slot. Divide your research work into parts, and do a particular part in a particular time slot.

17. Never copy others' work: Never copy others' work and give it your name because if the evaluator has seen it anywhere, you will be in trouble. Take proper rest and food: No matter how many hours you spend on your research activity, if you are not taking care of your health, then all your efforts will have been in vain. For quality research, take proper rest and food.

18. Go to seminars: Attend seminars if the topic is relevant to your research area. Utilize all your resources.

19. Refresh your mind after intervals: Try to give your mind a rest by listening to soft music or sleeping in intervals. This will also improve your memory. Acquire colleagues: Always try to acquire colleagues. No matter how sharp you are, if you acquire colleagues, they can give you ideas which will be helpful to your research.

20. Think technically: Always think technically. If anything happens, search for its reasons, benefits, and demerits. Think and then print: When you go to print your paper, check that tables are not split, headings are not detached from their descriptions, and page sequence is maintained.

21. Adding unnecessary information: Do not add unnecessary information like "I have used MS Excel to draw graphs." Irrelevant and inappropriate material is superfluous. Foreign terminology and phrases are not apropos. One should never take a broad view. Analogy is like feathers on a snake. Use words properly, regardless of how others use them. Remove quotations. Puns are for kids, not grunt readers. Never oversimplify: When adding material to your research paper, never go for oversimplification; this will definitely irritate the evaluator. Be specific. Never use rhythmic redundancies. Contractions shouldn't be used in a research paper. Comparisons are as terrible as clichés. Give up ampersands, abbreviations, and so on. Remove commas that are not necessary. Parenthetical words should be between brackets or commas. Understatement is always the best way to put forward earth-shaking thoughts. Give a detailed literary review.

22. Report concluded results: Use concluded results. From raw data, filter the results, and then conclude your studies based on measurements and observations taken. An appropriate number of decimal places should be used. Parenthetical remarks are prohibited here. Proofread carefully at the final stage. At the end, give an outline to your arguments. Spot perspectives of further study of the subject. Justify your conclusion at the bottom sufficiently, which will probably include examples.

23. Upon conclusion: Once you have concluded your research, the next most important step is to present your findings. Presentation is extremely important as it is the definite medium though which your research is going to be in print for the rest of the crowd. Care should be taken to categorize your thoughts well and present them in a logical and neat manner. A good quality research paper format is essential because it serves to highlight your research paper and bring to light all necessary aspects of your research.

Informal Guidelines of Research Paper Writing

Key points to remember:

- Submit all work in its final form.
- Write your paper in the form which is presented in the guidelines using the template.
- Please note the criteria peer reviewers will use for grading the final paper.

Final points:

One purpose of organizing a research paper is to let people interpret your efforts selectively. The journal requires the following sections, submitted in the order listed, with each section starting on a new page:

The introduction: This will be compiled from reference matter and reflect the design processes or outline of basis that directed you to make a study. As you carry out the process of study, the method and process section will be constructed like that. The results segment will show related statistics in nearly sequential order and direct reviewers to similar intellectual paths throughout the data that you gathered to carry out your study.

The discussion section:

This will provide understanding of the data and projections as to the implications of the results. The use of good quality references throughout the paper will give the effort trustworthiness by representing an alertness to prior workings.

Writing a research paper is not an easy job, no matter how trouble-free the actual research or concept. Practice, excellent preparation, and controlled record-keeping are the only means to make straightforward progression.

General style:

Specific editorial column necessities for compliance of a manuscript will always take over from directions in these general guidelines.

To make a paper clear: Adhere to recommended page limits.



© Copyright by Global Journals | Guidelines Handbook

Mistakes to avoid:

- Insertion of a title at the foot of a page with subsequent text on the next page.
- Separating a table, chart, or figure—confine each to a single page.
- Submitting a manuscript with pages out of sequence.
- In every section of your document, use standard writing style, including articles ("a" and "the").
- Keep paying attention to the topic of the paper.
- Use paragraphs to split each significant point (excluding the abstract).
- Align the primary line of each section.
- Present your points in sound order.
- Use present tense to report well-accepted matters.
- Use past tense to describe specific results.
- Do not use familiar wording; don't address the reviewer directly. Don't use slang or superlatives.
- Avoid use of extra pictures—include only those figures essential to presenting results.

Title page:

Choose a revealing title. It should be short and include the name(s) and address(es) of all authors. It should not have acronyms or abbreviations or exceed two printed lines.

Abstract: This summary should be two hundred words or less. It should clearly and briefly explain the key findings reported in the manuscript and must have precise statistics. It should not have acronyms or abbreviations. It should be logical in itself. Do not cite references at this point.

An abstract is a brief, distinct paragraph summary of finished work or work in development. In a minute or less, a reviewer can be taught the foundation behind the study, common approaches to the problem, relevant results, and significant conclusions or new questions.

Write your summary when your paper is completed because how can you write the summary of anything which is not yet written? Wealth of terminology is very essential in abstract. Use comprehensive sentences, and do not sacrifice readability for brevity; you can maintain it succinctly by phrasing sentences so that they provide more than a lone rationale. The author can at this moment go straight to shortening the outcome. Sum up the study with the subsequent elements in any summary. Try to limit the initial two items to no more than one line each.

Reason for writing the article—theory, overall issue, purpose.

- Fundamental goal.
- To-the-point depiction of the research.
- Consequences, including definite statistics—if the consequences are quantitative in nature, account for this; results of any numerical analysis should be reported. Significant conclusions or questions that emerge from the research.

Approach:

- Single section and succinct.
- An outline of the job done is always written in past tense.
- Concentrate on shortening results—limit background information to a verdict or two.
- Exact spelling, clarity of sentences and phrases, and appropriate reporting of quantities (proper units, important statistics) are just as significant in an abstract as they are anywhere else.

Introduction:

The introduction should "introduce" the manuscript. The reviewer should be presented with sufficient background information to be capable of comprehending and calculating the purpose of your study without having to refer to other works. The basis for the study should be offered. Give the most important references, but avoid making a comprehensive appraisal of the topic. Describe the problem visibly. If the problem is not acknowledged in a logical, reasonable way, the reviewer will give no attention to your results. Speak in common terms about techniques used to explain the problem, if needed, but do not present any particulars about the protocols here.

The following approach can create a valuable beginning:

- Explain the value (significance) of the study.
- Defend the model—why did you employ this particular system or method? What is its compensation? Remark upon its appropriateness from an abstract point of view as well as pointing out sensible reasons for using it.
- Present a justification. State your particular theory(-ies) or aim(s), and describe the logic that led you to choose them.
- Briefly explain the study's tentative purpose and how it meets the declared objectives.

Approach:

Use past tense except for when referring to recognized facts. After all, the manuscript will be submitted after the entire job is done. Sort out your thoughts; manufacture one key point for every section. If you make the four points listed above, you will need at least four paragraphs. Present surrounding information only when it is necessary to support a situation. The reviewer does not desire to read everything you know about a topic. Shape the theory specifically—do not take a broad view.

As always, give awareness to spelling, simplicity, and correctness of sentences and phrases.

Procedures (methods and materials):

This part is supposed to be the easiest to carve if you have good skills. A soundly written procedures segment allows a capable scientist to replicate your results. Present precise information about your supplies. The suppliers and clarity of reagents can be helpful bits of information. Present methods in sequential order, but linked methodologies can be grouped as a segment. Be concise when relating the protocols. Attempt to give the least amount of information that would permit another capable scientist to replicate your outcome, but be cautious that vital information is integrated. The use of subheadings is suggested and ought to be synchronized with the results section.

When a technique is used that has been well-described in another section, mention the specific item describing the way, but draw the basic principle while stating the situation. The purpose is to show all particular resources and broad procedures so that another person may use some or all of the methods in one more study or referee the scientific value of your work. It is not to be a step-by-step report of the whole thing you did, nor is a methods section a set of orders.

Materials:

Materials may be reported in part of a section or else they may be recognized along with your measures.

Methods:

- Report the method and not the particulars of each process that engaged the same methodology.
- Describe the method entirely.
- To be succinct, present methods under headings dedicated to specific dealings or groups of measures.
- Simplify—detail how procedures were completed, not how they were performed on a particular day.
- If well-known procedures were used, account for the procedure by name, possibly with a reference, and that's all.

Approach:

It is embarrassing to use vigorous voice when documenting methods without using first person, which would focus the reviewer's interest on the researcher rather than the job. As a result, when writing up the methods, most authors use third person passive voice.

Use standard style in this and every other part of the paper—avoid familiar lists, and use full sentences.

What to keep away from:

- Resources and methods are not a set of information.
- Skip all descriptive information and surroundings—save it for the argument.
- Leave out information that is immaterial to a third party.



© Copyright by Global Journals | Guidelines Handbook

Results:

The principle of a results segment is to present and demonstrate your conclusion. Create this part as entirely objective details of the outcome, and save all understanding for the discussion.

The page length of this segment is set by the sum and types of data to be reported. Use statistics and tables, if suitable, to present consequences most efficiently.

You must clearly differentiate material which would usually be incorporated in a study editorial from any unprocessed data or additional appendix matter that would not be available. In fact, such matters should not be submitted at all except if requested by the instructor.

Content:

- Sum up your conclusions in text and demonstrate them, if suitable, with figures and tables.
- In the manuscript, explain each of your consequences, and point the reader to remarks that are most appropriate.
- Present a background, such as by describing the question that was addressed by creation of an exacting study.
- Explain results of control experiments and give remarks that are not accessible in a prescribed figure or table, if appropriate.
- Examine your data, then prepare the analyzed (transformed) data in the form of a figure (graph), table, or manuscript.

What to stay away from:

- Do not discuss or infer your outcome, report surrounding information, or try to explain anything.
- Do not include raw data or intermediate calculations in a research manuscript.
- Do not present similar data more than once.
- A manuscript should complement any figures or tables, not duplicate information.
- Never confuse figures with tables—there is a difference.

Approach:

As always, use past tense when you submit your results, and put the whole thing in a reasonable order.

Put figures and tables, appropriately numbered, in order at the end of the report.

If you desire, you may place your figures and tables properly within the text of your results section.

Figures and tables:

If you put figures and tables at the end of some details, make certain that they are visibly distinguished from any attached appendix materials, such as raw facts. Whatever the position, each table must be titled, numbered one after the other, and include a heading. All figures and tables must be divided from the text.

Discussion:

The discussion is expected to be the trickiest segment to write. A lot of papers submitted to the journal are discarded based on problems with the discussion. There is no rule for how long an argument should be.

Position your understanding of the outcome visibly to lead the reviewer through your conclusions, and then finish the paper with a summing up of the implications of the study. The purpose here is to offer an understanding of your results and support all of your conclusions, using facts from your research and generally accepted information, if suitable. The implication of results should be fully described.

Infer your data in the conversation in suitable depth. This means that when you clarify an observable fact, you must explain mechanisms that may account for the observation. If your results vary from your prospect, make clear why that may have happened. If your results agree, then explain the theory that the proof supported. It is never suitable to just state that the data approved the prospect, and let it drop at that. Make a decision as to whether each premise is supported or discarded or if you cannot make a conclusion with assurance. Do not just dismiss a study or part of a study as "uncertain."

Research papers are not acknowledged if the work is imperfect. Draw what conclusions you can based upon the results that you have, and take care of the study as a finished work.

- You may propose future guidelines, such as how an experiment might be personalized to accomplish a new idea.
- Give details of all of your remarks as much as possible, focusing on mechanisms.
- Make a decision as to whether the tentative design sufficiently addressed the theory and whether or not it was correctly restricted. Try to present substitute explanations if they are sensible alternatives.
- One piece of research will not counter an overall question, so maintain the large picture in mind. Where do you go next? The best studies unlock new avenues of study. What questions remain?
- Recommendations for detailed papers will offer supplementary suggestions.

Approach:

When you refer to information, differentiate data generated by your own studies from other available information. Present work done by specific persons (including you) in past tense.

Describe generally acknowledged facts and main beliefs in present tense.

The Administration Rules

Administration Rules to Be Strictly Followed before Submitting Your Research Paper to Global Journals Inc.

Please read the following rules and regulations carefully before submitting your research paper to Global Journals Inc. to avoid rejection.

Segment draft and final research paper: You have to strictly follow the template of a research paper, failing which your paper may get rejected. You are expected to write each part of the paper wholly on your own. The peer reviewers need to identify your own perspective of the concepts in your own terms. Please do not extract straight from any other source, and do not rephrase someone else's analysis. Do not allow anyone else to proofread your manuscript.

Written material: You may discuss this with your guides and key sources. Do not copy anyone else's paper, even if this is only imitation, otherwise it will be rejected on the grounds of plagiarism, which is illegal. Various methods to avoid plagiarism are strictly applied by us to every paper, and, if found guilty, you may be blacklisted, which could affect your career adversely. To guard yourself and others from possible illegal use, please do not permit anyone to use or even read your paper and file.

Criterion for Grading a Research Paper (Compilation) by Global Journals

Please note that following table is only a Grading of "Paper Compilation" and not on "Performed/Stated Research" whose grading solely depends on Individual Assigned Peer Reviewer and Editorial Board Member. These can be available only on request and after decision of Paper. This report will be the property of Global Journals.

Topics	Grades		
	A-B	**C-D**	**E-F**
Abstract	Clear and concise with appropriate content, Correct format. 200 words or below	Unclear summary and no specific data, Incorrect form Above 200 words	No specific data with ambiguous information Above 250 words
Introduction	Containing all background details with clear goal and appropriate details, flow specification, no grammar and spelling mistake, well organized sentence and paragraph, reference cited	Unclear and confusing data, appropriate format, grammar and spelling errors with unorganized matter	Out of place depth and content, hazy format
Methods and Procedures	Clear and to the point with well arranged paragraph, precision and accuracy of facts and figures, well organized subheads	Difficult to comprehend with embarrassed text, too much explanation but completed	Incorrect and unorganized structure with hazy meaning
Result	Well organized, Clear and specific, Correct units with precision, correct data, well structuring of paragraph, no grammar and spelling mistake	Complete and embarrassed text, difficult to comprehend	Irregular format with wrong facts and figures
Discussion	Well organized, meaningful specification, sound conclusion, logical and concise explanation, highly structured paragraph reference cited	Wordy, unclear conclusion, spurious	Conclusion is not cited, unorganized, difficult to comprehend
References	Complete and correct format, well organized	Beside the point, Incomplete	Wrong format and structuring

Index

C

Cladding · 18, 20, 22
Corpuscles · 39
Corrosive · 22

E

Enactment · 28

F

Facsimile · 20

G

Grandiose · 13

I

Intangible · 30, 39

M

Merely · 30, 37, 39
Motile · 24

O

Opaque · 22

P

Paddle · 45
Penetration · 1, 4
Perceive · 39

R

Reciprocal · 5, 9, 36

U

Undulation · 38



Global Journal of Science Frontier Research

Visit us on the Web at www.GlobalJournals.org | www.JournalofScience.org
or email us at helpdesk@globaljournals.org

ISSN 9755896



© Global Journals