Online ISSN : 2249-4626
Print ISSN : 0975-5896
DOI : 10.17406/GJSFR

Global Journal of Science Frontier Research: D

Agriculture & Veterinary

Highlights

- Effect of Agricultural Credit Production in District Peshawar
- Prevalence of Bovine Mastitis
- Indigenous Chicken Production

Discovering Thoughts, Inventing Future

VOLUME 16 ISSUE 2 VERSION 1.0

© 2001-2016 by Global Journal of Science Frontier Research, USA

Global Journal of Science Frontier Research: D
Agriculture & Veterinary

Global Journal of Science Frontier Research: D
Agriculture & Veterinary

Volume 16 Issue 2 (Ver. 1.0)

Open Association of Research Society

© Global Journal of Science Frontier Research. 2016.

All rights reserved.

This is a special issue published in version 1.0 of "Global Journal of Science Frontier Research." By Global Journals Inc.

All articles are open access articles distributed under "Global Journal of Science Frontier Research"

Reading License, which permits restricted use. Entire contents are copyright by of "Global Journal of Science Frontier Research" unless otherwise noted on specific articles.

No part of this publication may be reproduced or transmitted in any form or by any means, electronic or mechanical, including photocopy, recording, or any information storage and retrieval system, without written permission.

The opinions and statements made in this book are those of the authors concerned. Ultraculture has not verified and neither confirms nor denies any of the foregoing and no warranty or fitness is implied.

Engage with the contents herein at your own risk.

The use of this journal, and the terms and conditions for our providing information, is governed by our Disclaimer, Terms and Conditions and Privacy Policy given on our website http://globaljournals.us/terms-and-condition/menu-id-1463/

By referring / using / reading / any type of association / referencing this journal, this signifies and you acknowledge that you have read them and that you accept and will be bound by the terms thereof.

All information, journals, this journal, activities undertaken, materials, services and our website, terms and conditions, privacy policy, and this journal is subject to change anytime without any prior notice.

Incorporation No.: 0423089
License No.: 42125/022010/1186
Registration No.: 430374
Import-Export Code: 1109007027
Employer Identification Number (EIN):
USA Tax ID: 98-0673427

Global Journals Inc.

*(A Delaware USA Incorporation with "Good Standing"; **Reg. Number: 0423089**)*

Sponsors: Open Association of Research Society
Open Scientific Standards

Publisher's Headquarters office

Global Journals® Headquarters
945th Concord Streets,
Framingham Massachusetts Pin: 01701,
United States of America
USA Toll Free: +001-888-839-7392
USA Toll Free Fax: +001-888-839-7392

Offset Typesetting

Global Journals Incorporated
2nd, Lansdowne, Lansdowne Rd., Croydon-Surrey,
Pin: CR9 2ER, United Kingdom

Packaging & Continental Dispatching

Global Journals
E-3130 Sudama Nagar, Near Gopur Square,
Indore, M.P., Pin:452009, India

Find a correspondence nodal officer near you

To find nodal officer of your country, please email us at *local@globaljournals.org*

eContacts

Press Inquiries: *press@globaljournals.org*
Investor Inquiries: *investors@globaljournals.org*
Technical Support: *technology@globaljournals.org*
Media & Releases: *media@globaljournals.org*

Pricing (Including by Air Parcel Charges):

For Authors:
22 USD (B/W) & 50 USD (Color)
Yearly Subscription (Personal & Institutional):
200 USD (B/W) & 250 USD (Color)

Integrated Editorial Board
(Computer Science, Engineering, Medical, Management, Natural Science, Social Science)

John A. Hamilton,"Drew" Jr.,
Ph.D., Professor, Management
Computer Science and Software Engineering
Director, Information Assurance Laboratory
Auburn University

Dr. Henry Hexmoor
IEEE senior member since 2004
Ph.D. Computer Science, University at Buffalo
Department of Computer Science
Southern Illinois University at Carbondale

Dr. Osman Balci, Professor
Department of Computer Science
Virginia Tech, Virginia University
Ph.D.and M.S.Syracuse University, Syracuse, New York
M.S. and B.S. Bogazici University, Istanbul, Turkey

Yogita Bajpai
M.Sc. (Computer Science), FICCT
U.S.A.Email:
yogita@computerresearch.org

Dr. T. David A. Forbes
Associate Professor and Range Nutritionist
Ph.D. Edinburgh University - Animal Nutrition
M.S. Aberdeen University - Animal Nutrition
B.A. University of Dublin- Zoology

Dr. Wenying Feng
Professor, Department of Computing & Information Systems
Department of Mathematics
Trent University, Peterborough,
ON Canada K9J 7B8

Dr. Thomas Wischgoll
Computer Science and Engineering,
Wright State University, Dayton, Ohio
B.S., M.S., Ph.D.
(University of Kaiserslautern)

Dr. Abdurrahman Arslanyilmaz
Computer Science & Information Systems Department
Youngstown State University
Ph.D., Texas A&M University
University of Missouri, Columbia
Gazi University, Turkey

Dr. Xiaohong He
Professor of International Business
University of Quinnipiac
BS, Jilin Institute of Technology; MA, MS, PhD,. (University of Texas-Dallas)

Burcin Becerik-Gerber
University of Southern California
Ph.D. in Civil Engineering
DDes from Harvard University
M.S. from University of California, Berkeley & Istanbul University

Dr. Bart Lambrecht
Director of Research in Accounting and FinanceProfessor of Finance
Lancaster University Management School
BA (Antwerp); MPhil, MA, PhD (Cambridge)

Dr. Carlos García Pont
Associate Professor of Marketing
IESE Business School, University of Navarra
Doctor of Philosophy (Management), Massachusetts Institute of Technology (MIT)
Master in Business Administration, IESE, University of Navarra
Degree in Industrial Engineering, Universitat Politècnica de Catalunya

Dr. Fotini Labropulu
Mathematics - Luther College
University of ReginaPh.D., M.Sc. in Mathematics
B.A. (Honors) in Mathematics
University of Windso

Dr. Lynn Lim
Reader in Business and Marketing
Roehampton University, London
BCom, PGDip, MBA (Distinction), PhD, FHEA

Dr. Mihaly Mezei
ASSOCIATE PROFESSOR
Department of Structural and Chemical Biology, Mount Sinai School of Medical Center
Ph.D., Etvs Lornd University
Postdoctoral Training,
New York University

Dr. Söhnke M. Bartram
Department of Accounting and FinanceLancaster University Management School Ph.D. (WHU Koblenz)
MBA/BBA (University of Saarbrücken)

Dr. Miguel Angel Ariño
Professor of Decision Sciences
IESE Business School
Barcelona, Spain (Universidad de Navarra)
CEIBS (China Europe International Business School).
Beijing, Shanghai and Shenzhen
Ph.D. in Mathematics
University of Barcelona
BA in Mathematics (Licenciatura)
University of Barcelona

Philip G. Moscoso
Technology and Operations Management
IESE Business School, University of Navarra
Ph.D in Industrial Engineering and Management, ETH Zurich
M.Sc. in Chemical Engineering, ETH Zurich

Dr. Sanjay Dixit, M.D.
Director, EP Laboratories, Philadelphia VA Medical Center
Cardiovascular Medicine - Cardiac Arrhythmia
Univ of Penn School of Medicine

Dr. Han-Xiang Deng
MD., Ph.D
Associate Professor and Research Department Division of Neuromuscular Medicine
Davee Department of Neurology and Clinical Neuroscience North western University Feinberg School of Medicine

Dr. Pina C. Sanelli
Associate Professor of Public Health
Weill Cornell Medical College
Associate Attending Radiologist
NewYork-Presbyterian Hospital
MRI, MRA, CT, and CTA
Neuroradiology and Diagnostic Radiology
M.D., State University of New York at Buffalo, School of Medicine and Biomedical Sciences

Dr. Roberto Sanchez
Associate Professor
Department of Structural and Chemical Biology
Mount Sinai School of Medicine
Ph.D., The Rockefeller University

Dr. Wen-Yih Sun
Professor of Earth and Atmospheric Sciences Purdue University Director National Center for Typhoon and Flooding Research, Taiwan University Chair Professor Department of Atmospheric Sciences, National Central University, Chung-Li, TaiwanUniversity Chair Professor Institute of Environmental Engineering, National Chiao Tung University, Hsin-chu, Taiwan.Ph.D., MS The University of Chicago, Geophysical Sciences
BS National Taiwan University, Atmospheric Sciences
Associate Professor of Radiology

Dr. Michael R. Rudnick
M.D., FACP
Associate Professor of Medicine
Chief, Renal Electrolyte and Hypertension Division (PMC)
Penn Medicine, University of Pennsylvania
Presbyterian Medical Center, Philadelphia
Nephrology and Internal Medicine
Certified by the American Board of Internal Medicine

Dr. Bassey Benjamin Esu
B.Sc. Marketing; MBA Marketing; Ph.D Marketing
Lecturer, Department of Marketing, University of Calabar
Tourism Consultant, Cross River State Tourism Development Department
Co-ordinator, Sustainable Tourism Initiative, Calabar, Nigeria

Dr. Aziz M. Barbar, Ph.D.
IEEE Senior Member
Chairperson, Department of Computer Science
AUST - American University of Science & Technology
Alfred Naccash Avenue – Ashrafieh

President Editor (HON.)

Dr. George Perry, (Neuroscientist)
Dean and Professor, College of Sciences
Denham Harman Research Award (American Aging Association)
ISI Highly Cited Researcher, Iberoamerican Molecular Biology Organization
AAAS Fellow, Correspondent Member of Spanish Royal Academy of Sciences
University of Texas at San Antonio
Postdoctoral Fellow (Department of Cell Biology)
Baylor College of Medicine
Houston, Texas, United States

Chief Author (HON.)

Dr. R.K. Dixit
M.Sc., Ph.D., FICCT
Chief Author, India
Email: authorind@computerresearch.org

Dean & Editor-in-Chief (HON.)

Vivek Dubey(HON.)
MS (Industrial Engineering),
MS (Mechanical Engineering)
University of Wisconsin, FICCT
Editor-in-Chief, USA
editorusa@computerresearch.org

Sangita Dixit
M.Sc., FICCT
Dean & Chancellor (Asia Pacific)
deanind@computerresearch.org

Suyash Dixit
(B.E., Computer Science Engineering), FICCTT
President, Web Administration and
Development , CEO at IOSRD
COO at GAOR & OSS

Er. Suyog Dixit
(M. Tech), BE (HONS. in CSE), FICCT
SAP Certified Consultant
CEO at IOSRD, GAOR & OSS
Technical Dean, Global Journals Inc. (US)
Website: www.suyogdixit.com
Email: suyog@suyogdixit.com

Pritesh Rajvaidya
(MS) Computer Science Department
California State University
BE (Computer Science), FICCT
Technical Dean, USA
Email: pritesh@computerresearch.org

Luis Galárraga
J!Research Project Leader
Saarbrücken, Germany

Contents of the Issue

i. Copyright Notice
ii. Editorial Board Members
iii. Chief Author and Dean
iv. Contents of the Issue

1. Effect of Flushing with Energy and Protein Source Diets on the Reproductive Performances of Meat Goats with High and Low Body Condition Scores. *1-7*
2. Effect of Agricultural Credit Advanced by Zarai Taraqiati Bank Limited (ZTBL) on Crop Production in District Peshawar. *9-12*
3. A Study on the Prevalence of Bovine Mastitis and Associated Risk Factors in and the Surrounding areas of Sodo Town, Wolaita Zone, Ethiopia. *13-19*
4. Study of Indigenous Chicken Production System in Bench Maji Zone, South Western Ethiopia. *21-30*
5. Drug Resistance Pattern of *Staphylococcus* in Poultry in Central and Southern Ethiopia. *31-36*
6. Demonstration and Evaluation of Dual Purpose Chicken *"Potchefstroom Koekoek"* Packages at Areka areas, SNNPR, Ethiopia. *37-41*
7. Design and Development of a Microcontroller based Egg Incubator for Small Scale Poultry Production. *43-48*
8. Studies on the Medicinal Plant *Acalypha Wilkesiana* Ethanol Extract Phytocomponents by GCMS Analysis. *49-55*

v. Fellows
vi. Auxiliary Memberships
vii. Process of Submission of Research Paper
viii. Preferred Author Guidelines
ix. Index

Global Journal of Science Frontier Research: D
Agriculture and Veterinary
Volume 16 Issue 2 Version 1.0 Year 2016
Type : Double Blind Peer Reviewed International Research Journal
Publisher: Global Journals Inc. (USA)
Online ISSN: 2249-4626 & Print ISSN: 0975-5896

Effect of Flushing with Energy and Protein Source Diets on the Reproductive Performances of Meat Goats with High and Low Body Condition Scores

By Aberra Melesse
Hawassa University, Ethiopia

Abstract- The objective of this experiment was to evaluate the effect of short-term flushing with energy and protein sources on the reproductive performances of meat goats for 21 days. A total of 180 Spanish and their crosses with Boer goats (Spanish X Boer) were randomly assigned to 6 treatments consisting of 2 body condition score (BCS) classes (Low and High) and 3 flushing treatments consisting of no supplementation (control), supplementation with protein mixture (PM) and combination of protein and energy (PE) in a 2 x 3 factorial arrangements. The results indicated that the BCS class had significant effect on pregnancy ($P < 0.01$) and kidding rates ($P < 0.05$) in which does in high body condition class had higher pregnancy and kidding rates than those in the low condition. The number of does diagnosed as pregnant was 67 and 81 and as non-pregnant was 23 and 9 for Low and High BCS does, respectively. Likewise, there were 24 and 11 does that did not kid and 66 and 79 that did for Low and High BCS, respectively. Litter size and weight was greater ($P < 0.05$) for Spanish X Boer than for Spanish does.

Keywords: *body condition score, body weight, boer goats, flushing, reproductive traits, spanish goats.*

GJSFR-D Classification : *FOR Code: 111199*

EFFECTOFFLUSHINGWITHENERGYANDPROTEINSOURCEDIETSONTHEREPRODUCTIVEPERFORMANCESOFMEATGOATSWITHHIGHANDLOWBODYCONDITIONSCORES

Strictly as per the compliance and regulations of :

© 2016. Aberra Melesse. This is a research/review paper, distributed under the terms of the Creative Commons Attribution-Noncommercial 3.0 Unported License http://creativecommons.org/licenses/by-nc/3.0/), permitting all non commercial use, distribution, and reproduction in any medium, provided the original work is properly cited.

Effect of Flushing with Energy and Protein Source Diets on the Reproductive Performances of Meat Goats with High and Low Body Condition Scores

Aberra Melesse

Abstract- The objective of this experiment was to evaluate the effect of short-term flushing with energy and protein sources on the reproductive performances of meat goats for 21 days. A total of 180 Spanish and their crosses with Boer goats (Spanish X Boer) were randomly assigned to 6 treatments consisting of 2 body condition score (BCS) classes (Low and High) and 3 flushing treatments consisting of no supplementation (control), supplementation with protein mixture (PM) and combination of protein and energy (PE) in a 2 x 3 factorial arrangements. The results indicated that the BCS class had significant effect on pregnancy ($P < 0.01$) and kidding rates ($P < 0.05$) in which does in high body condition class had higher pregnancy and kidding rates than those in the low condition. The number of does diagnosed as pregnant was 67 and 81 and as non-pregnant was 23 and 9 for Low and High BCS does, respectively. Likewise, there were 24 and 11 does that did not kid and 66 and 79 that did for Low and High BCS, respectively. Litter size and weight was greater ($P < 0.05$) for Spanish X Boer than for Spanish does. Both initial and final body weights were greater ($P < 0.05$) for the High vs. Low BCS class and for Spanish X Boer than for Spanish does. Change in body weight was similar among supplement treatments for High BCS does but greater for PM and PE vs. Control for the Low BCS class. The body weight of Spanish X Boer does tended ($P = 0.068$) to increase more than that of Spanish does during the period of supplementation. There were ($P < 0.05$) effects of supplement type (PM vs. PE) on final and change in BCS, with values greater for PE vs. PM does. There were interactions ($P < 0.05$) between BCS class and breed in final and initial BCS. The BCS was greater for Spanish X Boer than for Spanish does, with a greater difference for the High than Low BCS class. In conclusion, flushing with PM and PE sources for short period of time was found to be beneficial for improving the reproductive efficiency of meat type does particularly those with poor body condition scores.

Keywords: body condition score, body weight, boer goats, flushing, reproductive traits, spanish goats.

I. Introduction

Deposition of lipids is the main form of energy storage in goats and is important in determining body condition score (BCS). When does present poor BCS, they often have low conception rates, low twinning rates and kids with low birth and weaning weights (Luginbuhl and Poore 1998; Urrutia-Morales et al., 2012). Goats lose body condition with the progressive deterioration of pasture in the fall season. Under such condition, protein or energy-based supplementary feeding (flushing), around the time of mating usually improves reproductive performance by increasing the expression of estrus, conception, fecundity and twinning rates of goats (Kusina et al., 2001; De Santiago-Miramontes et al., 2008; Fitz-Rodriguez et al., 2009; Hafez et al., 2011).

In goats, the effect of flushing has not been exhaustively studied and the existing results are often variable and inconsistent depending on factors such as genotypes (Sormunen-Cristian and Jauhiainen, 2002), body conditions (O'Callaghan et al., 2000), timing and duration of flushing (Acero-Camelo et al., 2008; Sabra and Hassan, 2008; Karikari and Blasu, 2009), the quantity and quality of dietary supplements (Acero-Camelo et al., 2008), the grazing background (Molle et al., 1995; Safari et al., 2011; Urrutia-Morales et al., 2012) and grazing season (Safari et al., 2011; Naqvi et al., 2012).

Henniawati and Fletcher (1986), Kusina et al. (2001), Islam et al. (2007) and Urrutia-Morales et al. (2012) observed increase in ovulation rate with an improved nutritional plane. Flushing has also been reported to increase the body condition and weights of does not only at mating (static effects) but also during their post-partum period (Titi et al., 2008). Other scholars reported no response in flushing of goats in body weight, body condition score and reproductive performance traits (Titi and Awad, 2007; De Santiago-Miramontes et al., 2011; Hafez et al., 2011; Safari et al., 2011). Furthermore, body condition, or the level of fatness of an animal as affected by previous level of feeding, can influence responses to nutritional supplements (Sejian et al., 2009). It is also probable that different breeds respond uniquely to the flushing practice (Amoah et al., 1996; Sormunen-Cristian and Jauhiainen, 2002).

In goats, energy was found to be more critical than protein (Sachdeva et al., 1973; Hafez et al., 2011; Naqvi et al., 2012). However, there are some reports in

Author: School of Animal and Range Sciences, Hawassa University, Hawassa, Ethiopia. e-mails: a_melesse@yahoo.com, a_melesse@uni-hohenheim.de

© 2016 Global Journals Inc. (US)

which ovulation rate has been increased through use of high-protein feedstuffs, particularly ones high in ruminally undegraded protein and in branched chain amino acids and arginine (Robinson, 1996; Molle et al., 1997). The onset of natural oestrus in goats in Oklahoma State coincides with a period of low forage availability and (or) low forage quality. Furthermore, because of low summer rainfall and usual weaning in mid to late summer, does often are in low body condition in the breeding season unless considerable supplemental feedstuffs are provided. Flushing may reverse the adverse effect of low body condition in the dry doe. Therefore, this experiment was conducted to study short-term supplementation strategies with protein mixture sources alone and combinations of protein mixture with ground corn for improved reproductive performance of meat goat does categorized in low and high body condition groups

II. Materials and Methods

a) *Experimental animals*

The study was carried at the E (Kika) de la Garza American Institute for Goat Research of Langston University (Langston, OK, 35° 56′ N; 97° 15′ W; 299 m) and was approved by the Langston University Animal Care Committee. In this experiment, 90 pure Spanish and 90 Spanish x Boer (60 ½ Boer and 30 ¾ Boer) does were used with the average age of 4.8 and 3.9 years, respectively. Each genotype was equally distributed to the flushing treatments. In the preparatory phase, goats with variable body condition scores (BCS) were created based on degrees of fatness. The body condition differences among animals were achieved through different levels of feeding. The BCS classes were Low and High, corresponding to scores of 2.06-2.09 and 2.65-2.69 on a 1-5 point scale. Each animal was individually identified using plastic ear tags.

b) *Feeding design and feed compositions*

Based on breed type, body weight and body condition, does were randomly assigned to 6 treatments with 2 BCS classes and 3 flushing treatments (2 x 3 factorial design). As presented in Table 1, the flushing treatments were: no supplementation and supplementation with a mixture of protein sources alone (PM) or the PM plus energy (PE). Each group of does was kept overnight in a pen, where they had access to water and a mineral mix.

Table 1 : Experimental design and distribution of does across flushing treatments in low and high body condition score classes

Flushing treatments	High BCS	Low BCS	Total
Control	30	30	60
Protein mixture (PM)	30	30	60
PM + ground corn (PE)	30	30	60
Total animals	90	90	180

Control = no flushing with concentrate feedstuffs; PM = 125 g/day of a mixture of protein meals (as fed basis); PE = 125 g/day of a mixture of protein meals and 390 g/day of ground corn (as fed basis); BCS = body condition score

The composition of the supplement of protein and energy sources is given in Table 2. The as fed feeding rate of does flushed with PM was 125 g/day of a mixture of protein meals whereas that of PE flushed does was 515 g/day of which 125 g/day of a mixture of protein meals and 390 g/day of ground corn (as fed basis). For PM and PE supplements, liquid molasses was included to enhance palatability. The rate of molasses for PM and PE were 3.05 and 0.74% on DM basis, respectively (Table 2). The control treatment entails daily supplementation with mineral and vitamin sources (at feeding rate of 6.8 g/head/day) which were also included in PM and PE supplements. A small amount of dried molasses product was also included in the control diet to promote feed consumption (Table 2). Prairie grass hay (containing 6.53% CP) was provided *ad libitum* to all control and supplemented does and had access to pasture for browsing.

c) *Breeding and ultrasound examination*

The flushing period started on November 3 and ended November 23 lasting for the duration of 21 days. Breeding started on day 14 (November 17) after the beginning of the flushing by introducing sexually active Boer bucks. The duration of breeding was 42 days long and bucks were rotated among pens on day 21 (December 8). Bucks were fitted with marking harness to enable recording of the date of oestrus/mating. Breeding dates and oestrus was recorded daily. At the end of the flushing period (November 24), diets were changed to normal.

Table 2 : Ingredients and nutritional analysis of flushing treatments fed to does

Ingredients (%)	Control	PM	PE
Ground corn	0	0	75.75
Blood meal	0	30.87	7.49
Fish meal	0	30.87	7.48
Corn gluten	0	30.87	7.49
Liquid molasses	0	3.05	0.74
Dried molasses	25.4	0	0
Dicalcium phosphate	24.6	1.43	0.35
Vitamin A,D,E premix	26.2	1.53	0.37

© 2016 Global Journals Inc. (US)

Trace mineral salt	23.8	1.39	0.34
Total	100	100	100
Nutrients (on DM basis, %)			
Dry matter	98.7	96.8	95.7
Ash	9.52	11.3	8.14
Crude protein	5.37	27.4	30.3
Neutral detergent fibre	65.5	15.2	15.2

Control = no flushing with concentrate feedstuffs; PM = 125 g/day of a mixture of protein meals (as fed basis); PE = 125 g/day of a mixture of protein meals and 390 g/day of ground corn (as fed basis)

All goats were subjected to ultrasound (with 5.0 MHz transducer; Supply, Inc., Tequesta, Florida, USA) examination at about 22-25 days after the introduction of bucks, in order to detect the presence of *corpus luteum*. At 45-55 days of breeding, the second ultrasound measure was made on abdomen to assess number of embryos. To this effect, does were restrained while standing, and the transducer probe was placed on the hairless caudal ventral abdominal wall cranial to the udder. Before running the ultrasound test, alcohol of 70% was sprayed around the upper part of the udder to enhance the quality of ultrasound image.

d) Data collection protocols

Body weight and BCS (1-5 scale) were registered prior and after flushing. The BCS were evaluated by palpating the fullness of muscling and fat cover over and around the vertebrae in the loin area. The animals were weighed in a platform scale in the morning before leaving for grazing. Birth type (single, twins or triples), birth weight and sex of kids were also recorded. Pregnancy rate (number of goats pregnant per number of does mated in each treatment group), kidding rate (number of goats kidding per number of does mated in each treatment group), litter size (number kids born per number of does kidding in each treatment group) and twining rates (number of twins/triples born) were calculated.

e) Statistical analyses

Body weight, BCS, litter size, birth weight, and litter weight were analyzed by the GLM procedure of SAS (2010) with a model consisting of BCS class, supplement treatment, breed, and all interactions. The three-way interaction was not significant ($P > 0.10$) for any variable. Additional means separation was carried out by orthogonal contrasts for effects of BCS class, supplementation (Control vs. mean of PE and PM), type of supplement (PE vs. PM), breed, and two-way interactions. Chi-square categorical analysis was also conducted for pregnancy and kidding rates as well as litter size.

III. Results

As expected, both initial and final body weights were greater ($P < 0.05$) for the High vs. Low BCS class and for Spanish X Boer than for Spanish does (Table 3). There was an interaction ($P < 0.05$) between BCS class and flushing, although the magnitude was not great. Change in body weight (BW) was similar among flushed treatments for High BCS does but greater for PE and PM vs. Control for the Low BCS class. The body weight of Spanish X Boer does tended ($P = 0.068$) to increase more than that of Spanish does during the period of supplementation. There were effects ($P < 0.05$) of supplement type on final and change in BCS, with values greater for PE vs. PM does (Table 3). There were interactions ($P < 0.05$) between BCS class and breed in final and initial BCS. The BCS was greater for Spanish X Boer than for Spanish does, with a greater difference for the High than Low BCS class. However, the magnitude of this interaction was slightly less in final vs. initial BCS, with a greater increase in BCS during the supplementation period for Spanish vs. Spanish X Boer ($P < 0.05$), which is opposite the tendency for a breed difference in BW change. Moreover, the BCS of Low BCS does have increased during the supplementation period more than that of goats of the High BCS class.

Table 3 : Effects of initial body condition, different flushing treatments and breed of meat goats on body weight and body condition score (N = 180)

Performance traits	BCS classes		Flushing treatments			SE	Breed		SE
	Low	High	Control	PM	PE		Spanish X Boer	Spanish	
Initial body weight	38.9[b]	45.2[a]	41.4	42.2	42.6	0.83	45.5[a]	38.6[b]	0.68
Final body weight	42.9[b]	49.5[a]	45.4	46.2	47.0	0.89	50.0[a]	42.5[b]	0.72
Change							4.41	3.87	0.21
Low	-	-	3.30[b]	4.35[a]	4.23[a]	0.355	-	-	-
High	-	-	4.65	3.82	4.49	0.234	-	-	-
Initial BCS	-	-	2.36	2.37	2.38	0.037	2.56[a]	2.18[b]	0.04

© 2016 Global Journals Inc. (US)

Final BCS	-	-	2.58[b]	2.54[b]	2.69[a]	0.030	2.74[a]	2.47[b]	0.03
Change	-	-	0.22[ab]	0.16[b]	0.31[a]	0.030	0.17[b]	0.29[a]	0.02

[a,b] Means between variables with different superscript letters are significantly different (P < 0.05); SE = Standard error of the mean; BCS = Body condition score; Control = no flushing with concentrate feedstuffs; PE = 125 g/day of a mixture of protein meals and 390 g/day of ground corn (as fed basis); PM = 125 g/day of a mixture of protein meals (as fed basis)

As shown in Table 4, the number of does diagnosed as pregnant and that kidded was 145 and 148, respectively. The only factor having significant effect on pregnancy and kidding rates was BCS class (P = 0.006 and 0.014, respectively). Therefore, frequencies of pregnancy and kidding rates for the two BCS classes were not independent of one another.

Table 4 : Effect of initial boy condition score, different flushing treatments and breed of meat goats on reproductive performance traits (N = 180)

Reproductive traits	BCS classes		Flushing treatments			Breed	
	Low	High	Control	PM	PE	Spanish	Sp X Boer
Pregnancy rate	P = 0.006			NS		NS	
Pregnant does	37.2 (67)	45 (81)	26.1 (47)	27.8 (50)	28.3	40.6 (73)	41.7 (75)
Non-pregnant	12.8 (23)	5 (9)	7.22 (13)	5.56 (10)	5.00	9.44 (17)	8.33 (15)
Kidding rate	P = 0.014			NS		NS	
Kidded does	36.7 (66)	43.9 (79)	25.0 (45)	27.8 (50)	27.8 (50)	39.4 (71)	41.1 (74)
Not kidded does	13.3 (24)	6.11 (11)	8.33 (15)	5.56 (10)	5.56 (10)	10.6 (19)	8.89 (16)
Litter size	1.93	2.01	1.91	2.02	1.98	2.09[a]	1.85[a]
Birth weight (kg)	3.32	3.32	3.52	3.20	3.24	3.34	3.30
Litter weight (kg)	6.26	6.50	6.59	6.30	6.25	6.77[a]	6.00[b]

[a,b]Means between effects within each variables with different superscript letters are significantly different (P < 0.05); Values in parenthesis are observed individuals; BCS = Body condition score; Sp = Spanish; Control = no flushing with concentrate feedstuffs; PE = 125 g/day of a mixture of protein meals and 390 g/day of ground corn (as fed basis); PM = 125 g/day of a mixture of protein meals (as fed basis)

The number of does diagnosed as pregnant was 67 and 81 and as non-pregnant was 23 and 9 for Low and High BCS does, respectively. Likewise, there were 24 and 11 does that did not kid and 66 and 79 that did for Low and High BCS, respectively (Table 4). The number of does with litter size 1, 2, 3, and 4 was 31, 87, 26, and 1, respectively. There were non-significant effects on litter size of BCS class, supplement treatment, and all interactions except for BCS class × breed for litter size 1, as shown in Table 5. Even though the only difference in litter size detected with chi-square analysis was for breed and litter size 1, with analysis as a continuous variable litter size was greater for Spanish X Boer than for Spanish (P < 0.05; Table 4). Birth weight was different between breeds, resulting in greater litter weight (P < 0.05) for Spanish X Boer. Average birth weight was decreased (P < 0.05) by supplementation, although there was no effect (P > 0.10) on litter weight because of a tendency for greater litter size.

Table 5 : Frequency and chi-square analysis of litter size for meat goat does of different body condition score (BCS) classes and breeds

		Low BCS		High BCS	
Litter size	P value	Spanish x Boer	Spanish	Spanish x Boer	Spanish
1	0.038	3	12	9	7
2	0.331	23	18	21	25
3	0.920	6	3	11	6
4	>0.90	1	0	0	0

IV. Discussion

Flushing significantly improved the BCS in all supplemented does which is in good agreement with the reports of Vinoles et al. (2005) and Acero-Camelo et al. (2008). In the present study, does in low BCS responded positively to flushing as measured by high kidding rate compared to non-supplemented ones. While the kidding percentage is determined by several factors, much of the variation between comparable flocks results from differences in percentage of goats ovulating, which is influenced by their body condition and plane of nutrition (Mellado et al. 1996; Fitz-Rodríguez et al. 2009).

The overall pregnancy rate in Low and High BCS classes was 37% and 45%, respectively. The lower pregnancy rate observed in Low BCS class may be explained by the unimproved reproductive outcomes due to low nutritional status, a physiological scenario that reflects the importance of keeping a good body

© 2016 Global Journals Inc. (US)

condition in breeding does as suggested by Flores-Najera et al. (2010) and Rosales-Nieto et al. (2011). Under such scenario, does may be forced to redirect their scarce nutrient pool toward vital physiological and metabolic networks other than the neuroendocrine ovarian activation, remaining anoestrous as suggested by Gonzalez-Bulnes et al. (2011). This decreased metabolic status may also lead to a reduced responsiveness to the male effect (Urrutia-Morales et al., 2012).

The overall kidding rate in Low and High BCS classes was 36.7% and 43.9%, respectively. This finding suggests that a sufficiently high live weight of does is essential in maintaining good reproductive performance as well as growth performance and survival rates of kids. Weight changes of does during pregnancy often indicate pre-natal development of the foetus as evidenced by significant correlations between birth weight of the offspring and the body weight of the dam (Bosso et al., 2007).

Breeding of does in low BCS suggests potentially lower ovulation rates or higher embryonic losses than when breeding goats in good body condition. Similar observations have been made by Kusina et al. (2001) and Meza-Herrera et al. (2008). It is well documented that steady increase in body weight (Henniawati and Fletcher, 1986; Kusina et al., 2001; De Santiago-Miramontes et al., 2009) or short-term feed supplementation before mating (De Santiago-Miramontes et al., 2008) increases ovulation rate in goats.

Walkden-Brown and Bocquier (2000) suggested that availability of energy has a key influence on reproductive performance, due to sensitivity of the reproductive axis to the adequacy of nutrition and stores of metabolic reserves. Although not significant, a better kidding rate observed in supplemented does may be due to ovary stimulation. It seems that the ability to improve the body condition of the doe at mating could improve ovulation rate and therefore litter size of goats, a situation that makes "flushing" a realistic part of proper management practice in areas characterized by shortage of feed sources during dry season.

In the present study, numerically higher litter size was observed in supplemented does which agrees with the results of Acero-Camelo et al. (2008). This difference affected the birth weight of the kids, which was significantly lower in PE supplemented does than control ones. These results are in agreement with Amoah et al. (1996), Kusina et al. (2001) and Acero-Camelo et al. (2008). They found that twinning rate was significantly higher with the high energy treatment than low level supplementation.

Birth weight of the kids was numerically higher in non-supplemented does than those of supplemented ones which could be attributed to the low litter size. It is apparent that singles are heavier than twins or triples. Moreover, twins and triples compete for nutrients of the same mother while developing in the womb making them lighter than singles. It was found that litter size influenced birth weight of kids in which low litter size contributed to high birth weight of kids in control group than that of supplemented groups. These results are in good agreement with those of Saha et al. (2012) who reported similar effects of litter size on the birth weight of supplemented and unsupplemented does.

V. Conclusion

The body condition score class had significant effect on pregnancy and kidding rates in which does in high body condition class had higher pregnancy and kidding rates than those in the low condition. Litter size and weight was greater for Spanish X Boer than for Spanish does. Change in body weight was similar among flushed treatments for High body condition score does but greater for PM and PE vs. Control for the Low BCS class. The body condition score of Low BCS does increased during the supplementation period more than that of goats of the High BCS class; and was greater for Spanish X Boer than for Spanish does.

VI. Acknowledgements

This project was supported by a grant received from the United States Agency for International Development (USAID) through the Board of Regents of the University System of Georgia (Program No.: P-1-05814) for which the author is highly grateful. The author is also highly grateful to Dr. Arthur Goetsch (Langston University, OK) for taking care of all statistical analysis. The author sincerely acknowledges Dr. Tilahun Sahlu (Langston University, OK) for providing all research materials and working facilities and Dr. Seyoum Gelaye (Fort Valley State University, Georgia University Systems) for facilitating the fellowship grants during the research work.

References Références Referencias

1. Acero-Camelo, A., Valencia, E., Rodríguez, A., Randel P.F., 2008. Effects of flushing with two energy levels on goat reproductive performance. 20, Article #136. Retrieved December 8, 2012, from http://www.lrrd.org/lrrd20/9/acer20136.htm.
2. Amoah, E.A., Gelaye, S., Guthrie, P., Rexroad, Jr. C.E., 1996. Breeding Season and Aspects of Reproduction of Female Goats. J. Anim. Sci. 74, 723-728.
3. Bosso, N.A., Cissé, M.F., van der Waaij, E.H., Falla, A., van Arendonk, J.A.M., 2007. Genetic and phenotypic parameters of body weight in West African Dwarf goat and Djallonké sheep. Small Ruminant Res. 67 (3), 271-278.
4. De Santiago-Miramontes, M.A., Rivas-Muñoz, R., Muñoz-Gutiérrez, M., Malpaux, B., Scaramuzzi, R.

© 2016 Global Journals Inc. (US)

J., Delgadillo, J. A. 2008. The ovulation rate in anoestrous female goats managed under grazing conditions and exposed to the male effect is increased by nutritional supplementation. Anim. Reprod. Sci. 105, 409-416.

5. De Santiago-Miramontes, M.A., Malpaux, B., Delgadillo, J.A., 2009. Body condition is associated with a shorter breeding season and reduced ovulation rate in subtropical goats. Anim. Reprod. Sci. 114, 175-182.
6. De Santiago-Miramontes, M.A., Luna-Orozco, J.R., Meza-Herrera, C.A., Rivas-Muñoz, R., Carrillo, E., Veliz-Deras, F.G., Mellado, M., 2011. The effect of flushing and stimulus of estrogenized does on reproductive performance of anovulatory-range goats. Trop. Anim. Health Prod. 43, 1595-1600.
7. Fitz-Rodriguez, G., De Santiago-Miramontes, M.A., Scaramuzzi, R.J., Malpaux, B., 2009. Nutritional supplementation improvesovulation and pregnancy rates in female goats managed under natural grazing conditions and exposed to the male effect. Anim. Reprod. Sci. 116, 85-94.
8. Flores-Najera, M.J., Meza-Herrera, C.A., Echavarria, F.G., Villagomez, E., Iñiguez, L., Salinas, H., Gonzalez-Bulnes, A., 2010. Influence of nutritional and socio-sexual cues upon reproductive efficiency of goats exposed to the male effect under extensive conditions. Anim. Prod. Sci. 50, 897-901.
9. Gonzalez-Bulnes, A., Meza-Herrera, C.A., Rekik, M., Ben Salem, H., Kridli, R.T., 2011. Limiting factors and strategies for improving reproductive outputs of small ruminants reared in semi-arid environments. In: Semi-arid environments: Agriculture, water supply and vegetation. Ed: Degenovine, K.M. Nova Science Publishers, Inc. Hauppauge, NY, USA., p. 41-60.
10. Hafez, Y. H., Khalifa, E.I., El-Shafie, M.H., Khalek, T.M.M.A., Ahmed, M.E., Shehata, E.I., 2011. Effect of energy flushing pre-mating and during mating season on production and reproduction performance of Zaraibi goats. Egyp. J. Sheep Goat Sci. 6 (1), 7-14.
11. Henniawati, H., Fletcher, I.C., 1986. Reproduction in Indonesian sheep and goats at two levels of nutrition. Anim. Reprod. Sci. 12, 77-84.
12. Islam, R., Bhat, A.S., Sarkar, T.K., Singh, P.K., Khan, M.Z., 2007. Effect of flushing on reproductive performance of Corriedale ewes. Indian J. Small Rumin. 13, 55-60.
13. Karikari, P.K., Blasu, E.Y., 2009. Influence of nutritional flushing prior to mating on the performance of West African Dwarf goats mated in the rainy season. Pakistan J. Nutr. 8(7), 1068-1073.
14. Kusina, N.T., Chinuwo, T., Hamudikuwanda, H., Ndlovu, L.R., Muzanenhamo, S., 2001. Effect of different dietary energy level intakes on efficiency of estrus synchronization and fertility in Mashona goat does. Small Ruminant Res. 39, 283-288.
15. Luginbuhl, J.M., Poore, M., 1998. Nutrition of Meat Goats. Department of Animal Science, North Carolina State University. Raleigh, NC. Available at: http://www.cals.ncsu.edu/an_sci/extension/animal /meatgoat/MGNutr.htm.
16. Mellado, M., Cantú, L., Suárez, J.E., 1996. Effects of body condition, length of breeding period, buck:doe ratio, and month of breeding on kidding rates in goats under extensive conditions in arid zones of Mexico. Small Ruminant Res. 23 (1), 29-35.
17. Meza-Herrera, C.A., Hallford, D.M., Ortiz, J.A., Cuevas, R.A., Sanchez, J.M., Salinas, H., Mellado, M., Gonzalez-Bulnes, A., 2008. Body condition and protein supplementation positively affect periovulatory ovarian activity by non-LH mediated pathways in goats. Anim. Reprod. Sci. 106, 412-420.
18. Molle, G., Branca, A., Ligios, S., Sitzia, M., Casu, S., Landau, S., Zoref, Z., 1995. Effect of grazing background and flushing supplementation on reproductive performance in Sarda ewes. Small Ruminant Res. 17, 245-254.
19. Molle, G., Landau, S. Branca, A., Sitzia, M., Fois. N., Ligios, S., Casu, S., 1997. Flushing with soybean meal can improve reproductive performance in lactating Sarda ewes on mature pasture. Small Ruminant Res. 24, 157-165.
20. Naqvi, S.M.K., Sejian, V., Karim, S.A. 2012. Effect of feed flushing during summer season on growth, reproductive performance and blood metabolites in Malpura ewes under semiarid tropical environment. Trop. Anim. Health Prod. 43, 1595-1600.
21. O'Callaghan, D., Yaakub, H., Hyttel, P., Spicer, L.J., Boland, M.P., 2000. Effect of nutrition and superovulation on oocyte morphology follicular fluid composition and systemic hormone concentrations in ewes. J. Reprod. Fertil. 118, 303-313.
22. Robinson, J.J., 1996. Nutrition and reproduction. Anim. Reprod. Sci. 42, 25-34.
23. Rosales-Nieto, C.A., Gamez-Vazquez, H.G., Gudino-Reyes, J., Reyes-Ramirez, E.A., Eaton, M., Stanko, R.L., Meza-Herrera, C.A., Gonzalez-Bulnes, A., 2011. Nutritional and metabolic modulation of the female effect upon resumption of ovulatory activity of goats. Anim. Prod. Sci. 51, 115-112.
24. Sabra, H.A., Hassan, S.G., 2008. Effect of new regime of nutritional flushing on reproductive performances of Egyptian Barki Ewes. Global Veterinaria. 2(1), 28-31.
25. Sachdeva, K.K., Sengar, O.P.S., Singh, S.N., Lindahl, I.L., 1973. J. Agric. Sci. (Camb.), 80, 375-379.
26. Safari, J., Mushi, D.E., Kifaro, G.C., Mtenga, L.A., Eik, L.O., 2011. Seasonal variation in chemical composition of native forages, grazing behaviour

© 2016 Global Journals Inc. (US)

and some blood metabolites of small East African goats in a semi-arid area of Tanzania. Anim. Feed Sci. Technol. 164 (2), 62-70.

27. Saha, N.G., Alam M.R., Rahman, M.M., 2012. Effect of feed supplementation on reproduction, lactation and growth performance of Black Bengal goats grazed on native pasture. Bangladesh J. Anim. Sci. 41 (1), 41-46.
28. SAS, 2010. Statistical Analysis System. User's guide, version 9.3. SAS Institute, INC. Carry. NC. USA.
29. Sejian, V., Maurya V.P., Naqvi S.M.K., Kumar, D., Joshi, A., 2009. Effect of induced body condition score differences on physiological response, productive and reproductive performance of Malpura ewes kept in a hot, semi-arid environment. J. Anim. Physiol. Anim. Nutr. 94, 154-161.
30. Sormunen-Cristian, R., Jauhiainen, L., 2002. Effect of nutritional flushing on the productivity of Finnish Landrace ewes. Small Ruminant Res.43(1), 75-83.
31. Titi, H.H., Alnimer, M., Tabbaa, M.J., Lubbadeh, W.F., 2008. Reproductive performance of seasonal ewes and does fed dry fat during their post-partum period. Livest. Sci. 115(1), 34-41.
32. Titi1, H.H., Awad, R., 2007. Effect of dietary fat supplementation on reproductive performance of goats. Anim. Reprod. 4, 23-30.
33. Urrutia-Morales, J., Meza-Herrera, C.A., Tello-Varela, L., Díaz-Gómez, M.O., Beltrán-López, S., 2012. Effect of nutritional supplementation upon pregnancy rates of goats under semiarid rangelands and exposed to the male effect. Trop. Anim. Health Prod. 44, 1473-1477.
34. Vinoles, C., Forsberg, M., Martin, G.B., Cajarville, C., Repetto, J., Meikle, A., 2005. Short-term nutritional supplementation of ewes in low body condition affects follicle development due to an increase in glucose and metabolic hormones. Reproduction. 129, 299-309.
35. Walkden-Brown, S.W., Bocquier, F., 2000. Nutritional regulation of reproduction in goats. In: Proceeding of the 7th International Goat Conference. Tours, France, pp, 389-395.

© 2016 Global Journals Inc. (US)

This page is intentionally left blank

© 2016 Global Journals Inc. (US)

Global Journal of Science Frontier Research: D
Agriculture and Veterinary
Volume 16 Issue 2 Version 1.0 Year 2016
Type : Double Blind Peer Reviewed International Research Journal
Publisher: Global Journals Inc. (USA)
Online ISSN: 2249-4626 & Print ISSN: 0975-5896

Effect of Agricultural Credit Advanced by Zarai Taraqiati Bank Limited (ZTBL) on Crop Production in District Peshawar

By Ashfaq Ahmad Shah, Shakeel Ahmad, Nayab Ali & John Chrisostom Pesha
China Agriculture University, China

Abstract- Pakistan's economy is agrarian in nature and character. Agricultural sector is the main source of income for majority of population in the country. Subsistence kind of cultivation hardly allows the farmers to use high quality seeds, sufficient amount of fertilizers and other improved farm techniques. Small farmers are generally characterized as having low income, less saving and low capital formation. Apparently, credit seems to be the dire need of these clusters of farming community. This research endeavors to analyze the effect of agricultural credit advance by Zarai Taraqiati Bank Ltd (ZTBL) on crop production in district Peshawar Khyber Pakhtunkhwa (KP) province. For this purpose a house hold level survey was conducted and primary data were collected from a sample of 113 randomly selected farmers in a village (Urmar Maina) of District Peshawar. There were 818 (402 male and 416 female) family members in all the house- holds. Farming was the main occupation of all the respondents, 51(45%) had secondary occupation as well. most of the respondents utilized the loan for agriculture activities i.e. Purchase of improved seed, insecticides, fertilizer, machinery, Farm yard manure (FYM).

Keywords: micro credit loan, crop production, ZTBL.

GJSFR-D Classification : FOR Code: 079999

EFFECTOFAGRICULTURALCREDITADVANCEDBYZARAITARAQIATIBANKLIMITEDZTBLONCROPPRODUCTIONINDISTRICTPESHAWAR

Strictly as per the compliance and regulations of :

© 2016. Ashfaq Ahmad Shah, Shakeel Ahmad, Nayab Ali & John Chrisostom Pesha. This is a research/review paper, distributed under the terms of the Creative Commons Attribution-Noncommercial 3.0 Unported License http://creativecommons.org /licenses/by-nc/3.0/), permitting all non commercial use, distribution, and reproduction in any medium, provided the original work is properly cited.

Effect of Agricultural Credit Advanced by Zarai Taraqiati Bank Limited (ZTBL) on Crop Production in District Peshawar

Ashfaq Ahmad Shah [α], Shakeel Ahmad [σ], Nayab Ali [ρ] & John Chrisostom Pesha [ω]

Abstract- Pakistan's economy is agrarian in nature and character. Agricultural sector is the main source of income for majority of population in the country. Subsistence kind of cultivation hardly allows the farmers to use high quality seeds, sufficient amount of fertilizers and other improved farm techniques. Small farmers are generally characterized as having low income, less saving and low capital formation. Apparently, credit seems to be the dire need of these clusters of farming community. This research endeavors to analyze the effect of agricultural credit advance by Zarai Taraqiati Bank Ltd (ZTBL) on crop production in district Peshawar Khyber Pakhtunkhwa (KP) province. For this purpose a house hold level survey was conducted and primary data were collected from a sample of 113 randomly selected farmers in a village (Urmar Maina) of District Peshawar. There were 818 (402 male and 416 female) family members in all the house- holds. Farming was the main occupation of all the respondents, 51(45%) had secondary occupation as well. most of the respondents utilized the loan for agriculture activities i.e. Purchase of improved seed, insecticides, fertilizer, machinery, Farm yard manure (FYM).

The study results had shown that comparison of crop production before and after the micro credit loan. The study found a highly significant rise in the production of potato with increase in the yield/acre after getting micro credit loan from ZTBL, Tomato production increased (P=0.000), increased in Turnip (P-0.000) production, Ladyfinger (P=0.000), Wheat (P=0.000), Maize (P=0.000), Sugarcane (P=0.000), Peach (P=0.000) and Plum crops have shown amusingly increase i.e. P=0.000. For further effectiveness of the institutional loan it is important that interest rate charges on institutional credit should be reduced up to the extent that the farming community may utilized it easily, Procedure of advancing loan should be made simple, so that more farmers can be benefited and on time availability of credit should be ensured for timely purchase of the required inputs. In this way more and more farmers will be benefited from the credit advanced by Zarai Taraqiati Bank Limited ZTBL.

Keywords: micro credit loan, crop production, ZTBL.

Author α ω : PhD Scholar in Rural Development & Management, College of Humanities & Development (COHD) Studies China Agriculture University (CAU), No. 17 Qing Hua dong Lu, Haidian District, Beijing, P. R. China. e-mails: ahmad.ashfaq1986@gmail.com, johnpesha@yahoo.com

Author σ ρ: PhD Scholar in Rural Sociology, Department of Rural Sociology, Agricultural University, Peshawar–Pakistan. e-mails: shakeel.sociologist@gmail.com, nayabshah_uom@yahoo.com

I. Introduction

Agricultural output is low in developing countries especially in Pakistan due to small holdings, traditional methods of farming, poor irrigation facilities, low or misuse of modern farm technology etc (Zuberi, 1989). Pakistan is predominantly an agricultural country. Despite growing industrialization and urbanization of the country during the past few decades, agriculture still continues to be the main economic pillar of the country. Though its share in Gross Domestic product (GDP) has fallen overtime, it occupies a vital position in the economy of Pakistan by contributing about 21.8 percent to the GDP. About 70 percent of total population of the economy lives in rural areas and agriculture is the main source of their livelihood. According to an estimate, agriculture sector has engaged about 44.7% of the total labor force and contributed 34 % to the total export earning (Govt. of Pakistan, 2009).

Credit plays an important role in increasing agricultural productivity. Timely availability of credit enables farmers to purchase the required inputs and machinery for carrying out farm operations (Saboor et al, 2009). Availability of credit facility is an important financial support that a farmer can get in order to bridge the gap between his income and expenditure in the farming. It is an important instrument for enabling farmers to acquire command over the use of working capital. In Pakistan, there are two major sources of agricultural credit: Institutional and non institutional. Non-institutional sources comprise of Kin's, friends, landlords, moneylenders etc, where as institutional sources include Cooperative Banks, Agricultural Development Bank of Pakistan(ADBP) now called ZTBL nationalized and privatized commercial banks and Taccavi loans. However, ZTBL is the major source for advancing agriculture loan. For example, in 2008-09 the loans provided by the ZTBL amounted to Rs 75.13 billion as compared to five major commercial banks i.e. Allied Bank Limited (ABL), Habib Bank Limited (HBL), Muslim Commercial Bank (MCB), National Bank of Pakistan (NBP) & United Bank Limited (UBL) joint contribution of Rs 110.67 billion (i.e. Rs. 22.13 billion per bank nearly 30% of the ZTBL contributions), this

© 2016 Global Journals Inc. (US)

shows that ZTBL is the major source of agricultural loan (Govt of Pakistan, 2010).

In the country a greater part of economic activities in the wholesale and retail trade transportation and manufactures are direct result of production, distribution and trade of agricultural goods. A good harvest of agricultural commodities requires timely and adequate supply of farm inputs and fair returns to farmers. Majority of the farm community is comprised of subsistence farmers who are not in a position to use high quality seeds, required amount of fertilizers and improved farm implements. Lack of finance is one of the main reasons for low per acre productivity in our agriculture. The matter of enhancing agricultural productivity, therefore, largely depends on the availability of finance & credit facilities to the farmers in their respective areas (Arif, 2001).

The present study was designed to estimate the changes brought by micro-credit program of ZTBL in crop productivity and enhancing the marginal and small farmers for the alleviation of poverty

II. Objectives

1. To study the effect of credit on agriculture productivity.
2. To provide suggestion and recommendation on the basis of results and findings.

III. Hypothesis

Ho: Crop production have not increases after microcredit loan

H1: Crop production have increased after microcredit loan

IV. Review of Literature

Jehanzeb (2008), revealed in his study on "The effects of agricultural credit on farm productivity and the income of the small farmer" as a result of the credit provided by ZTBL of Pakistan. Farming was the main occupation of both respondents. The result reveals that the credit advanced by ZTBL in the study area has made a positive effect on the area of wheat and maize. However similar results were reported by Siddiqi et al, (2004) showed that flow of credit to farmers had increased demand for agriculture inputs to increase crop production.

Nosiru (2010) depicted in his study hat Micro credits and Agricultural Productivity in Ogun State, Nigeria that micro credit enabled farmers to buy the agriculture inputs they needed to increase their agricultural productivity. However, the amount of loan borrowed by the farmers in the study area did not contribute positively to level of output. This was as a result of non-judicious utilization, or distraction of credits obtained to other uses apart from the intended farm enterprises.

Javed (2006) highlighted in his study that availability of finance affects crop production in the way it facilitates the small and marginal farmers to purchase inputs at the proper time. Furthermore the study depicted that 86.67 percent respondents claimed that their crop production has increased after getting microcredit from PRSP. There were some farmers who were of the view that their crop production declined in spite of availability of finance. The reasons for decline in crop production were found to be mismanagement of the credit, small loan size, increased expenditures, no farming experience and drought. Average yield of wheat and sugarcane was estimated at 23.50 and 612.70 mounds, respectively on marginal

Arif (2001) examined the effects of Micro Credit disbursement by ADBP on agricultural production in Peshawar. He studied the effect of micro credit on cropping, wheat and vegetable production and the factors that made obstacles in obtaining credit from ADBP. The results show that maximum loaners were having age between 31-50 years. More than half of the total respondents were literate. Majority of them had land between 31-60 kanals and all respondents were found owners all respondents utilized the credit to get inputs, which increased cropping intensity. The most notable increase was observed in the wheat production, whereas change in vegetable production was found in selected village. Due to proper utilization of credit, the income of the sampled respondent got credit on time and reported that ADBP staff is efficient and the behavior was good as well. However, two third of total sampled respondents were not satisfied from security procedure due to its time consumption and unnecessarily delay in loan disbursement process. Those who could not get credit on time stated that they got inputs on credit form local market or sold their live stock or left their and fellow. As a whole the study states that credit has made a positive impact on both the crop and vegetable production. It can further be enhanced if loans are disbursed on time, utilized for the purpose it is obtained and there should be a constant and proper guidance from extension workers and staff of the ADBP.

V. Methodology

The study was conducted in district Peshawar of Khyber Paktunkhwa to see the effect of Micro Credit advanced by ZTBL on crop production of farmers. This study area was selected because ZTBL was one of the major institutional sources of agricultural credit for small farmers. A list of those villages, where the ZTBL involved actively in borrowing the credit, was obtained from the Peshawar branch of the Bank. The village Urmar Maina was purposively selected, because in this village maximum numbers of small farmer had borrowed loans from the ZTBL. To get a representative sample, the simple random sampling technique was applied to

© 2016 Global Journals Inc. (US)

collect the data. This technique was followed to ensure equal participation of all the strata of the population. Therefore 113 farmers were selected for this study that got loan from the ZTBL.

In the light of the study objectives, an interview schedule was prepared and pre- tested in the field. Amendments were made in the interview schedule based on pre testing responses and data were collected through interview method. The data was entered in SPSS (17 version) and T test statistics (paired t test) was applied to know the crop production before and after getting loan with the help of the formula which is given below;

$t=\frac{\bar{d}-\mu d}{s_d/\sqrt{n}}$, which under the null hypothesis follow a t distribution with (n-1) degree of freedom

t=Student t distribution

$\bar{d}$ =Mean of the two different sample observations

μd =Difference between two sample observations

s_d =Standard deviation

n=Sample size

Chaudry and Kamal (1996)

VI. Results and Discussion

a) Comparison of crop production before and after the credit

Table 1 shows comparison of crop production before and after the credit. Before credit per acre yield of potato was 17.87mds while after credit it jumped up to 24.95mds (an increased of 45%).Before credit per acre yield of tomato was 16.1770mds and after credit it went up to 25.11mds (an increased of 55%). Before credit per acre yield of turnip was 14.4513mds while after credit it moved up to 27.4602mds (an increase of 90%). Similarly before credit per acre yield of lady finger was 10.9823mds while after credit it runs up to 18.25mds (an increase of 66%).Per acre yield of wheat is 2190.54mds while after credit it become greater up to 3907.70mds (an increase 78%). Per acre yield of maize is 5981.20mds while after credit it grow up to 7695.20mds (an increase of 28%). Per acre yield of sugarcane is 9.3805mds while after credit it boost up to 16.9469mds (an increase of 80%).The per acre yield of peach is 9.7411karates while after credit it extend up to 16.5045karates (an increase 69%). Per acre yield of plum is 14.7080karates before credit while after credit it step up to 22.8761karates (an increase of 55%). Similarly per acre yield of apricot is 0.4159 karate's which rise up to 0.6327karates (an increased of 52%).

The table pointed out significant value and mean difference value with increase in the yield/acre after getting micro credit loan from ZTBL. In this regards, Potato shows significant value (P=0.000) and mean difference value is (-7.388), Tomato production also indicated highly significant value(P=0.000) and mean difference (-11.427) which shown increase in production, the result further disclosed that Turnip has a significant value (P-0.000) with mean difference (-9.274) shows its intensity on working hypothesis, Ladyfinger through micro credit loan shown high significant value (P=0.000) and mean difference value (-6.562), Wheat also shows significant (P=0.000) with mean difference(-5.02), Maize (P=0.000 and mean difference value -6.62), Sugarcane (P=0.000 and -4.652) and Peach and Plum crops have shown amusingly increase i.e. P=0.000 and average means were -3.526 and -2.704 after getting micro credit loan. However apricot was the only fruit crop which shown less significant and there was not prominent increase in the production after getting loan i.e. P=0.162 with the average mean difference -1.406.

Comparison of crop production before and after the credit

Crops	Units	Per Acre out put		T-value	Probability of 't'
		Before	After		
Potato	Mds	17.8761	24.9558	-7.388*	0.000
Tomato	Mds	16.1770	25.1150	-11.427*	0.000
Turnip	Mds	14.4513	27.4602	-9.274*	0.000
Ladyfinger	Mds	10.9823	18.2566	-6.562*	0.000
Wheat	Mds	2190.54	3907.70	-5.02*	0.0010
Maize	Mds	5981.20	7695.20	-5.64*	0.0008
Sugarcane	Mds	9.3805	16.9469	-4.652*	0.000
Peach	Mds	9.7411	16.5045	-3.526*	0.000
Plum	Mds	14.7080	22.8761	-2.704*	0.040
Apricot	Mds	0.4159	0.6327	-1.406	0.162

Source: Survey (significant at 95%)*

© 2016 Global Journals Inc. (US)

VII. Summary, Conclusion and Recommendations

The present study conducted to evaluate the effects of agricultural credit advanced by ZTBL on farm productivity in District Peshawar of Khyber Pukhtoonkhwa (KPK). For this purpose a total of 113 respondents were randomly selected in a village Urmar Maina of District Peshawar. The data was collected with the help of pre-tested interview schedule. The result shows that 44% got loan for seed, about 22 % of the respondents got loan for use of machinery, 20 % for fertilizer and 13% got loan for the farm yard manure (FYM). If we compare the statistics of farm inputs, used before and after the credit, it is apparent that a considerable improvement in the utilization of the inputs has occurred. While the crop production before and after the credit shows that all crops, except apricot, have shown a very significant increase in the yield per acre. Consequently an extensive progress has been observed with the consumption of the inputs.

For further effectiveness of the institutional loan it is important that; i) the interest rate charged on institutional credit should be reduced up to the extent that the farming community may utilized it easily, ii) the Procedure of advancing loan should be made simple, so that more farmers can be benefited and iii) in time availability of credit should be ensured for timely purchase of the required inputs. In this way more and more farmers will be benefited from the credit advanced by ZTBL.

References Références Referencias

1. Chaudry and Kamal. 1996. Introduction to statistical theory. 6th edition published by Ilmi Katab Khana.
2. Zuberi, H A (1983), —Institutional credit and balanced growth: A case study of Pakistan, Journal of Economic Development, 8, 2, Pp167-184.
3. Govt of Pakistan. 2009. Annual Report on Highlights of ZTBL Operation. Economic Research Department, ADBP, Islamabad. p.14.
4. Government of Pakistan 2009 Economic Survey of Pakistan, 2008-09. Economic Advisory Wing, Finance Division, Islamabad.
5. Saboor Abdul, Maqsood Hussain and Madiha Munir (2009), —Impact of micro credit in alleviating poverty: An Insight from rural Rawalpindi, Pakistan,‖ Pak. j. life soc. sci. (2009), 7(1): Pp90-97.
6. Arif, 2001. Effect of micro credit disbursed by ZTBL on agricultural production in District Attock; Institute of Development studies Faculty of Rural Social sciences, NWFP Agricultural university Peshawar Pakistan.
7. Muhammad Saddique Javed (2006). IMPACT ASSESSMENT OF MICRO-CREDIT PROGRAMME OF PRSP ON CROP PRODUCTIVITY. Pak. J Agri. Sci., Vol. 43(3-4). Available at http://pakjas.com.pk/papers/398.pdf
8. Nosiru, Marcus Omobolanle (2010), —Micro credits and agricultural productivity in Ogun State, Nigeria.‖World Journal of Agricultural Sciences 6 (3): Pp290-296, 1817-3047 © IDOSI Publications)
9. Siddiqi Muhammad Wasif, Mazhar-ul-Haq,Kishwar, Naheed Baluch (2004), — Institutional credit: A policy tool for enhancement of agricultural income of Pakistan.‖ International Research Journal of Arts & Humanities (IRJAH) Vol. 37)
10. Jehanzeb, N. (2008). Raising farm productivity through agricultural credit (A Case Study of Zarai Tarraqiati Bank of Pakistan Limited). Sarhad Journal of Agriculture Vol. 24, No. 4, 2008

© 2016 Global Journals Inc. (US)

Global Journal of Science Frontier Research: D
Agriculture and Veterinary
Volume 16 Issue 2 Version 1.0 Year 2016
Type : Double Blind Peer Reviewed International Research Journal
Publisher: Global Journals Inc. (USA)
Online ISSN: 2249-4626 & Print ISSN: 0975-5896

A Study on the Prevalence of Bovine Mastitis and Associated Risk Factors in and the Surrounding areas of Sodo Town, Wolaita Zone, Ethiopia

By Endale Mekonnin, Eyob Eshetu, Addisu Awekew & Naod Thomas
Wolaita Sodo University, Ethiopia

Introduction- Ethiopia is believed to have the largest livestock population in Africa. This livestock sector has been contributing considerable portion to the economy of the country, and still promising to rally round the economic development of the country. It is eminent that livestock products and by-products in the form of meat, milk, honey, eggs, cheese, and butter supply provide mainly the needed animal protein that contributes to the improvement of the nutritional status of the people (CSA, 2009). Even though Ethiopia is the most populous country in cattle than any African country; the per capita milk consumption was 16 kg, which was lower than other countries in the region (Asfaw, 1997). This is partly due to the low genetic milk production potential of the indigenous zebu cattle. To increase milk production cross breeding of indigenous zebu with exotic breeds particularly with Holstein Friesian is widely practiced which resulted in a larger portion of the dairy cattle population especially in urban areas to be with a high level of exotic blood. However, this market oriented dairy production, a rapidly growing system in many African countries, is subjected to diseases of intensification including mastitis and reproductive disorders (Lemma *et al.,* 2001).

GJSFR-D Classification : FOR Code: 079999

A STUDY ON THE PREVALENCE OF BOVINE MASTITIS AND ASSOCIATED RISK FACTORS IN AND THE SURROUNDING AREAS OF SODO TOWN WOLAITA ZONE ETHIOPIA

Strictly as per the compliance and regulations of :

© 2016. Endale Mekonnin, Eyob Eshetu, Addisu Awekew & Naod Thomas. This is a research/review paper, distributed under the terms of the Creative Commons Attribution-Noncommercial 3.0 Unported License http://creativecommons.org/licenses/by-nc/3.0/), permitting all non commercial use, distribution, and reproduction in any medium, provided the original work is properly cited.

A Study on the Prevalence of Bovine Mastitis and Associated Risk Factors in and the Surrounding areas of Sodo Town, Wolaita Zone, Ethiopia

Endale Mekonnin [α], Eyob Eshetu [σ], Addisu Awekew [ρ] & Naod Thomas [ρ]

I. Introduction

Ethiopia is believed to have the largest livestock population in Africa. This livestock sector has been contributing considerable portion to the economy of the country, and still promising to rally round the economic development of the country. It is eminent that livestock products and by-products in the form of meat, milk, honey, eggs, cheese, and butter supply provide mainly the needed animal protein that contributes to the improvement of the nutritional status of the people (CSA, 2009). Even though Ethiopia is the most populous country in cattle than any African country; the per capita milk consumption was 16 kg, which was lower than other countries in the region (Asfaw, 1997). This is partly due to the low genetic milk production potential of the indigenous zebu cattle. To increase milk production cross breeding of indigenous zebu with exotic breeds particularly with Holstein Friesian is widely practiced which resulted in a larger portion of the dairy cattle population especially in urban areas to be with a high level of exotic blood. However, this market oriented dairy production, a rapidly growing system in many African countries, is subjected to diseases of intensification including mastitis and reproductive disorders (Lemma *et al.,* 2001).

Ethiopia holds large potential for dairy development due to its large cattle population and the favorable climate for improved high yielding animal breeds (Bishi, 1998). Considering the potential if smallholder income and employment generation, development of dairy farming can make significant contribution to the poverty reduction and nutritional improvement in the country (Staal, 1996). Dairy production is a biological efficient system that converts large quantities of roughage which is the most abundant of fed to milk (Reugg, 2001). In Ethiopia, where access to market dairying is preferred to meet production since it makes more efficient use of feed resource and provides a regular income to the producers. Milk is very nutritional food that is reach in carbohydrate, protein, fat, vitamin and minerals. The increase in human populations, accessibility to technology input and high demand for animal product purchasing power in urban center had helped the urban and per-urban dairy farm in the country to flourish (Yoseph *et al.,* 1998).

Mastitis is one of the most important disease affecting dairy cows and it is a multi-factorial disease with worldwide distribution which incurs serious economic losses to dairy industry (DeGrave and Fetrow, 1993). A number of previous reports from different part of Ethiopia indicated that mastitis is a serious problem in dairy industry (Bishi, 1998). Bovine mastitis can reduce milk yield, increase culling rate, incur treatment cost, and occasionally result in death from severe infection (Radostitis *et al*., 2007). Moreover, mastitis had been known to cause a great deal of loss or reduction of productivity, to influence the quality and quantity of milk yield, and to cause culling of animals at an unacceptable age (Singh and sigh, 1994). Generally, as with most infectious disease, mastitis risk factors depends on three components that is exposure to the microbes, cow defense mechanism, and environment and management factors (Suriyasathaporn *et al.,* 2000). Therefore, the objectives of this study were to determine the prevalence of bovine subclinical mastitis, to identify the major bacteria that cause subclinical mastitis and to determine the various risk factors associated with the occurrence of mastitis in and surrounding areas of Sodo town, Wolaita zone, Ethiopia.

II. Materials and Methods

a) Study area

The study was carried out in small and large scale dairy farms in Sodo town and the surroundings, Southern Ethiopia. Sodo town is located about 329 km south of Addis Ababa at an altitude of 700-2950m above sea level. Sodo town is administrative center of Wolaita zone. The zone has an average annual rain fall ranging from 450-1446 mm. The rain fall over much of the areas is typically bimodal with the major rainy season extending from June-September and the short rainy

Author α σ ρ Ω: School of Veterinary Medicine, Wolaita Sodo University, Ethiopia. e-mails: eyobeshetu@ymail.com, naodtom@gmail.com, tiwoadd@gmail.com

© 2016 Global Journals Inc. (US)

season occurs from February-April. The mean annual maximum and minimum temperature of the area is 34.12 and 11.4°C, respectively (SZPEDD, 2001). The livestock population of Wolaita zone is estimated to be 886,242 bovine, 117,274 ovine, 99,817 caprine, 41,603 equines and 442,428 poultry (WZFEDD, 2005).

b) Study population

The study populations constituting lactating local (indigenous zebu), Holstein-Friesian breed, Holstein Friesian cross with local zebu breed and Jersey breed with no visually observed mastitis clinical sign and those are found in small and large scale dairy farms of Sodo town and the surroundings.

c) Study design

A cross sectional study design in which all the study animals were seen visually for non-clinical mastitis by physical examination of the udder and then tested for subclinical mastitis by CMT (California Mastitis Test). Information regarding the potential risk factors such as age, parity, stage of lactation, frequency of milking and hygiene of the farm were collected by questioner survey and by the observation of the investigators.

d) Sample size

The sample size for the study was calculated based on the formula developed by Thrust field (2005) for random sampling method. A 5% absolute precision and 95% confidence interval is used for determining sample size. Since there is a previous study on the prevalence of mastitis in the study area, an expected prevalence of 29.5% is used to determine the maximum sample size.

$$N = \frac{1.96^2 \times P\,exp\,(1-Pexp)}{d^2}$$

Where N = the total sample size
Pexp = expected prevalence
d = absolute precision. Therefore, the calculated sample sizes was 319 samples

e) Sampling method

Strict aseptic procedure was followed when collecting milk samples to prevent contamination with microorganisms present on the skin of udder and teats, on the hands of samplers and barn environment. Teat ends were cleaned and disinfected before sampling. Strict foremilk (first jets) were discharged to reduce the number of contamination of teat canal. Sterile universal bottle with tight fitting cups were used. The universal bottle was labeled with permanent marker before sampling. To reduce contamination of teat ends during sample collection, the near teats were sampled first and then followed by the far ones (Quinn *et al.,*. 1999).

f) Study methodology

i. *Physical examination of the udder and milk*

The udders were first examined visually and then palpated to detect any possible fibrosis, inflammatory swelling and atrophy of the tissue. The size and consistency of the mammary quarter was inspected for the presence of any abnormalities such as disproportional symmetry, swelling, firmness and blindness of the teat canal. In addition, two streaks of milk from each quarter in a strip cup was inspected by visual inspection for presence of any flakes, clots, pus, watery appearance, blood and color change.

g) California Mastitis Test

After physical examination and strict aseptic procedure followed clinically free of mastitis cow was first tested by Califoria mastitis test (CMT). Subclinical mastitis was diagnosed based on CMT result and the nature of coagulation and viscosity of the mixture, which show the presence, and the severity of the infection, respectively (Radostits *et al.*, 1994). CMT grades were evaluated and the result was scored based on the gel formation and categorized as negative if there was no gel formation, or positive if there was as 0 and 1 for negative and 2 and 3 for positive (Kerro Dego and Tareke, 2003). Milk samples were collected from each sub clinically mastitic non-blind quarters of the CMT positives cows for bacterial isolation. Then, 5ml positive milk sample was collected by sterile universal bottle from CMT positive quarter and transported to Wolaita Sodo Regional Veterinary Laboratory for further examination. When immediate inoculation was not convenient, samples was stored at 4°C until cultured for isolation.

h) Laboratory work

i. *Culturing and Biochemical tests*

Loop of milk sample was streaked on 5% sheep blood agar and plates were incubated aerobically at 37°C and examined after 24hrs of incubation for growth. The colonies were provisionally identified on the basis of staining reaction with Gram's stain, cellular morphology and hemolytic pattern on blood agar. The representative colonies were sub cultured on blood agar plate and on nutrient slants and incubated. The slants were preserved and maintained for characterizing the isolates slide Catalase tests, KOH and IMVIC tests for further isolation.

i) Data Management (Statistics)

Data was coded and entered to MS Excel spreadsheet and checked for accuracy. Pearson's chi-square test or Fisher's exact test was used to analyze the proportions of categorical data. Information regarding the potential risk factors for sub clinical mastitis such as age, breed, parity and hygienic management of the farm was analyzed.

III. Results and Discussion

The present study was carried out to determine the prevalence of bovine subclinical mastitis, to identify the major bacteria that cause mastitis and to determine the various risk factors associated with the occurrence

© 2016 Global Journals Inc. (US)

of mastitis in and surrounding areas of Sodo town, Wolaita zone, Ethiopia. Of 319 samples collected from small scale dairy farms of the study area and were screened by CMT, which yielded an overall prevalence of 32.92% that is 105 animals examined had infection in their udders as evidence of mastitis. Findings of the present study closely agree with those of M.A.Islam *et al*., (2011) who reported 29%. This study prevalence was lower than the findings of Lidet *et al*., (2013) who reported 58%.

a) Breed related prevalence

Breed difference can play a vital role in the prevalence of different animal diseases. In this study area, four different breeds of cows are there especially at dairy farm level. The finding of this study was assessed for breed predisposition to the prevalence of SCM among the four breeds namely: Indigenous zebu, Holstein, Jersey and Holstein Friesian cross. Accordingly, highest prevalence of SCM was revealed in Jersey (62.5%) and Holstein Friesian (47.5%), while lowest was recorded in Indigenous zebu (16.67%) and Holstein Friesian cross (16.78%) as shown in table-1 below. The highest prevalence observed both in Jersey and Holstein Friesian was statistically significant ($P<0.05$). It has been reported that mastitis prevalence may be influenced by some inheritable characteristic such as capacity of milk production teat characteristic and udder conformation (Abaineh, 1997). However, the insignificant difference in the prevalence of mastitis between Jersey and Holstein Friesian as well as Indigenous zebu and Holstein Friesian cross reported in this work needs further investigation. It is worthwhile to mention here that the indigenous zebu and their crosses stocks are subjected to poor management conditions as compared to Jersey and Holstein cows.

Table-1 : The prevalence of mastitis by breed

Breed	Positive No. (%)	Negative No. (%)	X^2; P-value
Jersey	20 (62.5%)	12 (37.5%)	
Indigenous zebu	3 (16.67%)	15 (83.33%)	X^2=
Holstein Friesian	57 (47.5%)	63 (52.5%)	P=
Holstein Friesian cross	25 (16.78%)	124 (83.22%)	
Total	105 (32.92%)	214 (67.08%)	

b) Different age group based prevalence

Age is a detrimental factor in the distribution of various diseases because at some time it is stressor. Hence, in the present study it was taken into consideration and the prevalence of mastitis was measured for different age groups of lactating cows. The prevalence of subclinical mastitis was recorded as 69.8%, 33.5% and 34.15% at the age group of <4years, 5-7 years and >7 years, respectively. The prevalence was found to be much higher in the young than both the adult and older age group (table-2). This is actually found to be statistically significant with $P<0.05$.

Table-2 : The prevalence of mastitis with respect to different age group

Age group	Positive (%)	Negative (%)	Total (%)	P-value
<4 years	19 (69.8%)	44 (30.2%)	63 (19.75%)	
5-7 years	72 (33.5%)	143(66.5%)	215 (67.40%)	P=0.00
>7years	14 (34.15%)	27 (65.85%)	41 (12.85%)	
Total	105	214	319	

c) Parity related prevalence

The prevalence of varies livestock infection generally increases with increasing lactation number. The finding of this study was also assessed for the number of parity as predisposition to mastitis (table-3). Accordingly, in this study it indicates that the prevalence of subclinical mastitis was found highest both at ≤ 2 parity (43.33%) and ≥ 5 parity (43.33%) in comparison to 3rd and 4th parity and it was showed statistically significant variation with $P<0.05$. But increasing tendency with prevalence of SCM was recorded with increase of parity and this observation supports with the reports of Rassl *et al*., (1985) and Devi *et al*., (1997) both of them reported an increasing prevalence of SCM with advancing parity.

Table-3 : Showing prevalence of mastitis in different parity groups of animals

Parity group	No. of animals examined		Prevalence (%)	P-value
	Affected (%)	Non-affected (%)	Total	
≤ 2	26 (43.33%)	34 (56.67%)	60 (18.81%)	P=0.000
3-4	59 (27.7%)	154 (72.3%)	213 (66.77%)	
≥ 5	20 (43.48%)	26 (56.52%)	46 (14.42%)	
Total	105	214	319	

© 2016 Global Journals Inc. (US)

d) Prevalence of mastitis based on milking hygiene

Several factors in the environment affect the exposure of a cow to microorganisms. Sources of environmental exposure are manure, bedding, feeds, dirt, mud and water. A good example of this is *E.coli,* which is present in the environment of the cow. Several studies have indeed linked the cleanliness of the barn, and the colony count in the bedding with the incidence of clinical mastitis (Bramley and Neave 1975). Of critical importance is hygiene in the dry period. Most infections with coliform and environmental streptococci take place in the last two weeks before calving, and often only show signs of clinical mastitis after calving. Reducing exposure of the mammary gland by improving hygiene or providing a physical barrier at the teat end have shown to reduce the incidence of infections in this period.

e) Isolation of bacteria from sub clinical mastitis cases

In the present study, mastitis causing bacteria were isolated from sub clinical mastitis cases. Among the bacterial, Staphylococcus species 60 (57.14%) dominated followed by Sterptococus species 30 (28.57%) and *E.coli* 15 (14.29%) which was isolated from sub clinical mastitis cows. With regard to the bacteriological analysis of milk sample, the work revealed that from the CMT positive milk sample the mixed bacterial isolates were the most prevalent than each isolated bacteria. It was reported that Streptococcus species together with Staphylococcus species were the most important causes of bovine mastitis (Blood and Radostitis, 1989). And the species of bacteria isolated *S.aureus* was most commonly isolated in sub clinical case of mastitis in this study case. The high level isolation of *Staphylococcus species* in this study is related with the finding of Ahamed and Mohammed (2007) in Egypt. This finding was not in harmony with reports of Bishi (1998) and Edwards *et al.* (1982) who found CNS as the predominant species from urban and peri-urban production system in Ethiopia and Bolivia, respectively. The reason for the higher isolation rate of this organism is the wide ecological distribution inside the mammary gland and skin. In area where hand milking and improper use of drug is practiced to treat the mastitis cases, its domination has been reported by many research scholars. *S.aureus* is adapted to survive in the udder and usually establishes mild sub clinical infection of long duration from which it is shaded through milk serving as sources of infection for other healthy cows and transmitted during the milking process (Radostitis *et al.*, 1994). Hence, the organism has been assuming a position of major importance as a cause of bovine mastitis.

The finding was also slightly in agreed with the findings of Molalegne *et al.* (2010) and Mengistu (1986) who reported *E.coli* species with the infection rate in this study was lower as compared to the other bacterial species. In general, the prevalence of mastitis causing agents is high in subclinical cases. Thus, the farms should follow the key factors of mastitis program such as good herd management, teat dipping before and after milking, washing milkers hands before and after milking, preparation of clean towel for each lactating cow, milking of infected cow lastly, using dry cow therapy method and treating clinical cases at early stage.

References Références Referencias

1. Abdelrahim, A.I., Shommein, A., Suliman, H.B., Shaddad, S.A.I. (1989): Prevalence of mastitis in imported Friesian cows in Sudan. Review of Production and Veterinary Medecine for tropical Country. 47, 512-514
2. Andrews, A.H., Blowely, R.W., Hoyd, H., Eddy, R.G. (2004): Bovine Medicine and Husbandery of cattle 2nd ed. Blackwell Science Ltd, Blackwell Publishing Company. Pp. 326-340
3. Argaw, K. and Tolosa, T. (2005): The prevalence of sub clinical mastitis in small holder dairy farm in Selale, North Showa zone, central Ethiopia. *The international J of Vet Med*, 1937-8165
4. Asfaw, W. (1997): Livestock development policy in Ethiopia. In: CTA, OAU/IBAR, Ministry of Agriculture and Cooperatives, Swaziland. Livestock Development Policies in Eastern and Southern Africa. Paper presented in a seminar held in Mbabane, Swaziland, 28 July–August 1997
5. Banerjee, K., Ray, J. P., Sadhukhan, T., Das, R., Chandra, S. (2002): Studies on etiological agents of sub clinical mastitis in dairy cows in West Bengal. *Ind. J. Ani. Hlth*. **41**:109-112
6. Barkema, H.W., Shukken, Y. H., Lamtj, G. M., Beiboer, M. L., Wilmilk, H., Benedictus, G. (1998): Incidence of clinical mastitis in dairy herds grouped in three categories by bulk milk somatic cell counts. *J Dairy Sci* **81**: 411-419
7. Bartlett, P.C., Vanwijk, J., Wilson, D.J., Green, C.D., Miller, G.Y., Majeweski, G.A., Heider, L.E. (1991): Temporal patterns of lost milk production following clinical mastitis in large Michigan Holstein herd. *J Dairy Sci*. **74**: 1561-1572
8. Becker, N. G. (1989): Analysis of infectious disease data. Chapman and Hall, London
9. Biffa, D., Debela, E., Beyene, F. (2005): Factors Assocaited with Udder Infection in lactating dairy cows in southern Ethiopia . *Praxis Veternaria* **53** (3) 149-160
10. Biru, G. (1989): Major bacteria causing bovine mastitis and their sensativity to common antibiotic. *Ethiopia Journal of Agricultur Science*. **11**: 47-54
11. Bishi, A.S. (1998): Cross-sectional and longitudinal prospective study of bovine clinical and subclinical mastitis in peri-urban and urban dairy production

© 2016 Global Journals Inc. (US)

systems in the Addis Ababa region, Ethiopia, Msc Thesis, Faculty of Veterinary Medicine, Addis Ababa University School of Graduate Studies and Freie Universidad, Berlin

12. Bramely, A.J. (1992): Mastitis in disease and husbandry of cattle. U.K, Blackwell scientific publication, pp 289-300
13. Byarugaba, D.K., Nakavuma, J.L., Vaarst, M., Laker, C. (2008): Mastitis occurance and constraints to mastitis control in smallholder dairy farming system in Uganda. *Livestock Resarch for rular development*. **20**:35-39
14. Central Statistical Agency (CSA) (2009): Federal Democratc Republic of Ethiopia Centeral Stastical Agency (CSA): Agricultural Sample Survey. Livestock and livestock Characteristics vol, 2
15. Central Statistical Authority (CSA) (2003): Statistical Report of Socio-Economical characteristics of the Population in Agriculture Household and land Use: Results for SNNP Region Volume 2, part 1, Addis Ababa, Ethiopia.
16. Chauhan, R.S, and Agarwal, D.K, (2006): Text book of Veterinary Clinical & Laboratory Diagnosis, 2nd ed. India, JAPEEBROTHERS, pp 162-164
17. DeGrave, F.J. and Fetrow, J. (1993): Economics of mastitis and mastitis control. Veterinary Clinics of North America, Food Animal Practice. **9**: 421
18. Doane, R.M., Oliver, S.P., Walker, S.D., Shull, E.P. (1987): Experimental infection of lactating bovine mammary glands with *Streptococcus uberis* in quarters colonized by *Corynebacterium bovis*. *American J. Vet. Res*. **48**: 749-754
19. Erskine, R.J., Eberhart, R.J., Hutchinson, L.J., Spencer, S.B. (1988): Incidence and types of clinical mastitis in dairy herds with high and low somatic cell counts. *Journal of the American Veterinary Medical Association*. **192**: 761-765
20. Fekadu, K. (1995): Survey on the prevalence of Bovine Mastitis and predominant causative agent in Chaffa vally. Page.101-111. In: proceeding of the 9th conference of Ethiopia Veterinary Association, Addis Ababa, Ethiopia.
21. Fourichon, C., Seegers, H., Beaudeau, F., Verfaille, L., Bareille, N. (2011): Health control cost in dairy farming system in Westarn France. **68**:141-168
22. Grohn, Y.T., Eicker, S.W., Hertl, J.A. (1995): The association between previous 305-day milk yield and disease in New York state dairy cows. *J Dairy Sci*. **78**: 1693-1702
23. Hirsh, D.C. and Zee, Y.C. (1999): Veterinary Microbiology. USA, Black well science, Inc. pp.115-249
24. Hogan, J.S., Gonzalez, R.N., Harmon, R.J., Nickerson, S.C., Oliver, S.P., Pankey, J.W., Smith, K.L. (1999): Laboratory and field handbook on bovine mastitis. Madison, WI, National Mastitis Council, Inc, pp. 1-33
25. Houben, E.H.P., Dlijkhuizen, A.A., Van Arendonk, J.A.M., Huirne, R.B.M. (1993): Short- and long-term production losses and repeatability of clinical mastitis in dairy cattle. *J Dairy Sci*. **76**: 2561-2578
26. Hoyer, M.J., Codd, R., Bishi, A.S., Pawandiwa, A., Usenic, E.A. (1991): The prevalence of clinical mastitis in the beef herd in Zembabwe. *Zembabwe Veterinary Jourinal*. **22**:1
27. Huber, W.G. (1994): Antibacterial drug effectiveness against pathogens. *Journal of the American Veterinary Medical Association*. **170**:118-124
28. Hussein, N., Yehualashet, T., Tilahun, G. (1997): Prevalence of mastitis in different local and exotic breeds of milking cows. *Ethiopian Journal of Agricultural Science*. **16**: 53–60
29. Jain, N.C. (1987): Common mammary pathogen and factor in infection and mastitis. *J Dairy Sci*. **190**:1530-1533
30. Jones, G.M., Bailey, T.L., Roberson, J.R. (1998): *Staphylococcus aureus* mastitis: Cause, Detection, and Control. Virginia State University, 404-425
31. Jones, T.C., Hunt, R.D., King, N.W. (1996): Veterinary pathology, 6th ed LIPPINCOTWILLIAM &WILIKING, pp 375-493
32. Jubb, K.V.F., Kennedy, P.C., Palmer, N. (1993): Pathology of Domestic Animals, 4th ed, vol 3, USA Elsevier Science, pp 455-466
33. Kassa, T., Wirtu, G., Tegegne, A. (1999): Survey of mastitis in dairy herds in the Ethiopian central highlands. *Ethiopian Journal of Science*. **22**: 291–301
34. Kerro Dego, O. and Tareke, F. (2003): Bovine mastitis in selected area of southern Ethiopia. *Journa of tropical Animal Health and Production*. **35**: 197-205
35. Kingwill, K.G., Nealce, F.K., Dodd, F.H., Griffin, T.K., Westgarth, D.R., Wilson, C.D. (1991): The effect of mastitis control system on the level of subclinical and clinical mastitis in two years, *Vet Rec*. **87**:94
36. Kossaibati, M.A., Hovi, M., Esslemont, R.J. (1998): Incidence of clinical mastitis in dairy herds in England. *Veterinary Recored*. 143:649-653
37. Lemma M., Kassa, T. Tegegene, A. (2001): Clinically manifested major health problems of crossbred dairy herds in urban and periurban production systems in the central high lands of Ethiopia. *Journal of Tropical Animal Health and Production*. **33**: 85–89
38. Lucy, S., Rowlands, G.J., Russell, A.M. (1996): Short-term associations between disease and milk yield of dairy cows. *J Dairy Res*. **53**:7-15
39. MacDonad, J.S. (1997): Streptococcus and Staphylococuss mastitis. *Journal of the American Veterinary Medical Association*. **170**:1157-1161
40. Mekibib, B., Fergasa, M., Abunna, F., Megersa, B., Regassa, A. (2010): Bovine Mastitis: Prevalance,

© 2016 Global Journals Inc. (US)

Risk factors and major pathoges in Dairy farms of Holeta town, Centeral Ethiopia.*Vet.World*. **3**:397-403

41. Mohammed, A. (2010): Bacterial cause mastitis in Wondo-Genet, Ethiopia. *Journal of Veterinary Medicine*. **43**: 379–384
42. Mungube, E.O. Tenhagen, B.A., Regassa, F., Kyule, M.N., Shiferaw, Y., Kassa, T., Baumann, M.P. (2005): Reduced Milk Production in Udder Quarters with Sub clinical Mastitis and Associated Economic Losses in Crossbred Dairy Cows in Ethiopia. *Journal of Tropical Animal Health and Production*. **37**: 1573–7438
43. NMC (1990): Microbiological procedure for the diagnosis of bovine udder infection. 3rd ed. Arlington V A: National Mastitis Council, Inc.
44. Quinn, O.K., Carter, M.E., Markey, B., Carter, G.R. (1999): Clinical Veterinary Microbiology. USA, Elsevier Limited.
45. Quinn, P.J., Markey, B.K., Carter, M.E., Donnelly, W.J., Leonard, F.C. (2002): Veterinary Microbiology and Microbial Disease. Blackwell Science Ltd, Blackwell Publishing Campany. Pp 465-474
46. Radostits, O.M., Gay, C.C., Hinchcliff, K.W., Constable, P.D. (2007): Veterinary Medicine: A text book of the disease of cattle, horses, sheep, pigs and goats. 10th ed Elsevier London, pp 674-762
47. Radostits, O.M., Leslie, K.E., Fetrow, J. (1994): Mastitis control in dairy herds. Herd Health Food Animal Production Medicine, 2nd ed. W.B.saunders, Philadelphia, pp. 229-273
48. Rajala, P.J., Grohn, Y.T., Mcculloche, C.E., Guard, C.L. (1999): Effects of clinical mastitis on milk yield in dairy cows. *J Dairy Sci*. **82**: 1213-1220
49. Reugg, L.P. (2001): Health and production management in dairy herds. In: Radostits, O.M. (ed), herd health, food animal production. 3rd ed. W. B. Saunders Company, Philadelphia, Pennsylvania, pp 211–244
50. Rice, D.N. and Bodman,G.R. (2004): The somatic cell count and milk quality. *American J. Vet. Res.* **25**:1635-1641
51. Roy, S.K., Paye, P.K., Maitra, D.N., Dattagupta, R., Mazumber, S.C. (1999): Mastitis in cross breeds in hot humid condition of West Bengal, India. *Vet. J*. **66**: 844-846
52. Schalm, D.W., Carrol, E.G., Jain, C. (1989): Bovine mastitis. Lea and Febiger: Philadelphia. pp 20-158
53. Sears, P.M., Gonzalez, R.N., Wilson, D.J., Han, H.R. (1999): Procedures for Mastitis Diagnosis and Control. *Vet Clin North Am Large Anim Pract*. **9**:445-468
54. Sidama Zone Planning and Economic Development Department (SZPEDD, 2001)
55. Singh, P.J. and Sigh, K.B. (1994): A study on economic loss due to mastitis in India. *J Dairy Sci*. **47**:265-271
56. Smith, A., Westgarth, D.R., Jones, M.R., Neave, F.K., Dodd, F.H., Brander, G.C. (1997): Methods of reducing the incidence of udder infection in dry cows. *Vet Rec*. **81**:504.
57. Smith, J.W., Elylo, O., Chapa, M.A. (2000): Effect of region, herd size, and milk production on reasons cows leave the herd. *J Dairy Sci*. **83**: 2980-2987
58. Sori, H., Zerihun, A., Abdicho, S. (2005): Dairy cattle mastitis in and around Sebeta. *Intern J Appl Res Vet Med*. **3**: 338-341
59. Staal, S.J. (1996): The Economic Impact of Public Policy on Smallholder Peri-urban Dairy Producer in and around Addis Ababa, Ethiopia Society of Animal Production (ESAP) Publication No 2. Addis Ababa, Ethiopia.
60. Suriyasathaporn, W., Schukken, Y.H., Nielsen, M., Brand, A. (2000): Low somatic cell count: a risk factor for subsequent clinical mastitis in dairy herd. *J Dairy Sci*. **83**: 1248-1255
61. Tolla, T. (1996): Bovine mastitis in indigenous Zebu and Borana Holestein crosses in Southern Wollo. Thesis, Debrezeit: Faculty of Veterinary Medicine, Addis Ababa University: Ethiopia. Pp 25-27
62. Tolosa, A. (1987): A Survey of Bovine Mastitis around Kallu Province. Thesis, Debrezeit: Faculty of Veterinary Medicine, Addis Ababa University: Ethiopia. pp 24-26
63. Tyler, J.W. (1992): Treatment of subclinical mastitis. *Vet Food Anim Pract*. **8**:17-28
64. Vecht, U., Wisselink, H., Detizer, P.R. (1989): Dutch National Mastitis Survey. The effect of herd animal factors on somatic cell count. *Netherland Milk and Dairy Journals*.**43**: 425
65. Weiss, W.P., Hogan, J.S., Todhunter, D.A., Smith, K.L. (1997): The effect of vitamin E supplementation in diets with low concentration of selenium on mammary gland health of dairy cow. *J .Dairy Sci*. **80**:1728-1737.
66. Wilesmith, J.W., Francis, P.G., Wilson, C.D. (1996): Incidence of clinical mastitis in cohort of British dairy herds.*Veterinary Recored*, **188**:199-204.
67. Wilson, D.J., Gonzalze, R.N., Das, H.H. (1997): Bovine mastitis pathogens in New York and Pennsyluania: Prevalence and effect on somatic cell count and milk production. *J. Dairy Sci*. **80**:2592-2598.
68. Workineh, S., Bayleyegne, M., Mekonnen, H., Potgieter, L.N.D. (2002): Prevalence and etiology of mastitis in cows from two major Ethiopian dairies. *Journal of Tropical Animal Health and Production*, **34**:19–25.
69. Yoseph, M., Azage, T., Alemu, Y., Umunna, N.N. (1998): Reproductive management and reproductive performance of dairy herds in urban and peri-urban dairy production systems in Addis Ababa milk shed. In: proceeding of the 6th annual

© 2016 Global Journals Inc. (US)

conference of Ethiopia Society of Animal Production (ESAP), Addis Ababa, Ethiopia, 312-315.

70. Zerihun, T. (1996): A Study on Bovine Subclinical Mastitis at Stela Dairy Farm. Thesis, Debrezeit: Faculty of Veterinary Medicine, Addis Ababa University, Ethiopia. Pp 25.

© 2016 Global Journals Inc. (US)

This page is intentionally left blank

© 2016 Global Journals Inc. (US)

Global Journal of Science Frontier Research: D
Agriculture and Veterinary
Volume 16 Issue 2 Version 1.0 Year 2016
Type : Double Blind Peer Reviewed International Research Journal
Publisher: Global Journals Inc. (USA)
Online ISSN: 2249-4626 & Print ISSN: 0975-5896

Study of Indigenous Chicken Production System in Bench Maji Zone, South Western Ethiopia

By Getachew Bekele, Kefelegn Kebede & Negassi Ameha
Gambella University, Ethiopia

Abstract- Indigenous chickens in Ethiopia are found in huge numbers distributed across different agro ecological zones under a traditional family-based scavenging management system. This indicates that, they are highly important farm animals kept as a source of animal protein and income to most of the rural populations. Religions and cultural considerations are also amongst the reasons for keeping chickens by resource poor farmers in Africa. Similarly, households in Ethiopia keep birds for household consumption, sale and reproduction purposes including other social and cultural roles. Ethiopia, with its wide variations in agro-climatic conditions, possesses one of the largest and the most diverse plant and animal genetic resources in the world. Therefore, this study was conducted from September 2013 to May 2014 in nine selected kebeles and South bench Woreda's located in Bench Maji Zone of South western of Ethiopia with the objective to describe indigenous chicken husbandry practices and production system.

Keywords: indigenous, production, clutches, broodiness, hatchability.

GJSFR-D Classification : FOR Code: 309999p

STUDYOFINDIGENOUSCHICKENPRODUCTIONSYSTEMINBENCHMAJIZONESOUTHWESTERNETHIOPIA

Strictly as per the compliance and regulations of :

© 2016. Getachew Bekele, Kefelegn Kebede & Negassi Ameha. This is a research/review paper, distributed under the terms of the Creative Commons Attribution-Noncommercial 3.0 Unported License http://creativecommons.org/licenses/by-nc/3.0/), permitting all non commercial use, distribution, and reproduction in any medium, provided the original work is properly cited.

Study of Indigenous Chicken Production System in Bench Maji Zone, South Western Ethiopia

Getachew Bekele [α], Kefelegn Kebede [σ] & Negassi Ameha [ρ]

Abstract- Indigenous chickens in Ethiopia are found in huge numbers distributed across different agro ecological zones under a traditional family-based scavenging management system. This indicates that, they are highly important farm animals kept as a source of animal protein and income to most of the rural populations. Religions and cultural considerations are also amongst the reasons for keeping chickens by resource poor farmers in Africa. Similarly, households in Ethiopia keep birds for household consumption, sale and reproduction purposes including other social and cultural roles. Ethiopia, with its wide variations in agro-climatic conditions, possesses one of the largest and the most diverse plant and animal genetic resources in the world. Therefore, this study was conducted from September 2013 to May 2014 in nine selected kebeles and South bench Woreda's located in Bench Maji Zone of South western of Ethiopia with the objective to describe indigenous chicken husbandry practices and production system. The study involved both questionnaire survey and a participatory group discussion. A total of 180 indigenous chicken owning farmers and 660 chickens (180 cocks and 480 hens) aged more than 6 month were considered under field condition. Significant ($p<0.05$) differences were found among the districts in traits. The frequency of egg set to broody hen/year was 1.95 in north-bench, 1.98 in sheko and 2.10 in south-bench, average number of eggs set to broody hens was 12.11 in north-bench, 11.72 in sheko and 11.27 in south-bench of which the average percentage of hatchability was 77.97% in North bench, 75.51% in Sheko and 80.92% in South bench. The average number of clutches per hen per year of village chicken were non-significant ($P<0.05$) among the study districts. North-bench chickens had (3.65) mean number of clutch per hen per year, sheko (3.67) and south-bench (3.64) chickens, respectively. The number of eggs per clutch found in the current study was 14.43, 14.74 and 14.81 in north-bench, sheko and south-bench respectively. Generally developing appropriate production programs for village conditions requires defining the production environments, identifying the breeding practices, production objectives, trait preferences of rural farmers and unique characteristics of indigenous chicken ecotypes were observed in the study area.

Keywords: indigenous, production, clutches, broodiness, hatchability.

Author α: Departement of Animal Science, College of Agriculture and Natural Resources, Gambella University. e-mail: gechobek@gmail.com
Author σ ρ: School of Animal and Range Sciences, Haramaya University, Dire dewa Ethiopia.

I. Introduction

Indigenous chicken productivity is low as compared to exotic breeds with average annual egg production of 60 eggs. Low productivity is also due to low hatchability and high mortality of indigenous chicken. This initiates the government to modernize poultry production by introducing exotic breeds and encouraging more productive technologies. This indiscriminate introduction of exotic genetic resources, before proper characterization, utilization and conservation of indigenous genetic resources is thought as the main cause of the loss of indigenous chicken genetic resource (Halima, 2007). Disease (Serkalem *et al.,* 2005), predation (Halima, 2007), market system (Bogale, 2008), management and production system (Fisseha, 2009; Fisseha *et al*., 2010a) are major constraints of chickens in scavenging production system of Ethiopia.

Provision of animal protein, generation of extra cash income and religious /cultural considerations are amongst the major reasons for keeping village chickens by rural communities (Alders *et al*., 2009). Nearly all rural and peri-urban families in developing countries keep a small flock of free range chickens (Jens *et al*., 2004). The total chicken population in the country is estimated to be 50.37 million (CSA, 2012/13). The majorities (99 %) of these chickens are maintained under traditional system with little or no inputs for housing, feeding or health care (Tadelle and Ogle, 2001). This indicates that traditional chicken production is practiced by every family in rural Ethiopia because they provide protein for the rural population and generate family income. Therefore, this study was aimed to generate the relevant information regarding the indigenous chicken production system of Bench Maji Zone. Hence, the objective of this study was to describe indigenous chicken husbandry practices, and production systems of indigenous chicken type's in Bench Maji Zone.

II. Materials and Methods

Description of the Study Area: This study was conducted in Bench Maji Zone (BMZ) which is located in the south western part of Ethiopia. BMZ is found at distance about 561km from Addis Ababa and 842 km from the regional capital Hawassa. It is bordered with Keffa Zone in North, Debub Omo in North East, Sheka Zone in South West,

© 2016 Global Journals Inc. (US)

with Gambella and South Sudan Republic in South direction (BMZARD, 2014). Agro-ecologically, BMZ, consists of 52 percent lowland (500-1500 m.a.s.l), 43percent intermediate highland (1500-2300 m.a.s.l) and 5percent highland (>2300 m.a.s.l). It has an altitude ranging from 500-2500 m.a.s.l. The mean annual temperature varies from 15.1^{0C} - 27.5^{0C}. The mean annual rainfallranges from 400-2000 mm (BMZARD, 2014). Bench MajiZone has 10 districts from which this study involved threedistricts; namely North-bench, Sheko and South-bench.

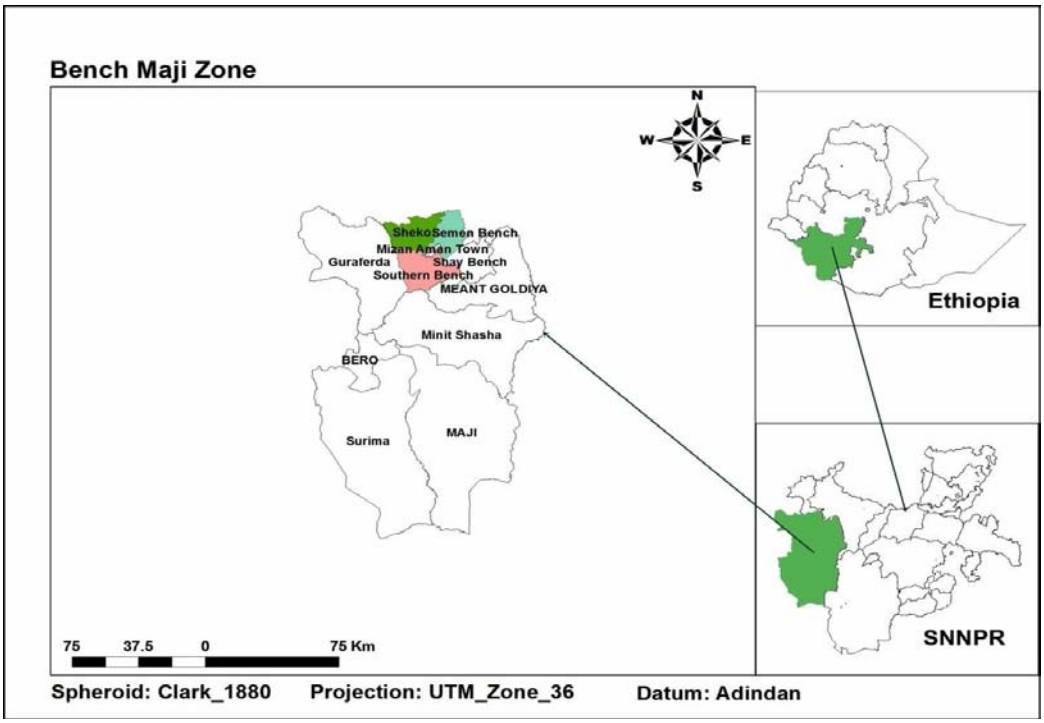

❖ Map of the study area

a) Sampling Techniques for Data Collection

A rapid field survey was made prior to the actual survey work to explore the available knowledge about the type, distribution and utility of chicken types. The data on distribution and numbers of indigenous chickens were taken from office of Agriculture and Rural Development (BMZARD) of each district in the zone before starting the field work. Then three districts and a total of nine peasant associations (PAs) were selected based on the information gathered through the rapid field survey to the main road and consultations with Woreda's Agricultural experts and extension agents. A total of 180 households (60 from each district) were sampled for interview from the selected PAs.

b) Data Collection Procedure

The data were generated through observation, administering a structured questionnaire organizing group discussion and from secondary sources.

c) Data Management and Statistical Analysis

All data were coded and recorded in Microsoft excel sheet. Statistical analyses were made separately for male and female chicken on variables that varied on sex; otherwise the data were merged and analyzed together.

d) Descriptive Statistics

Statistical analysis system (SAS) version 9.2 (2008) was used to carry out descriptive statistics variables of the identified indigenous chicken populations production systems.

e) Univariate Analysis

A general linear model procedure (PROC GLM) of the SAS was employed for quantitative variables to detect statistical differences among sampled indigenous chicken populations. For mature animals, sex and location of the experimental indigenous chickens were fitted as fixed independent variables. The effects of class variables and their interaction were expressed as Least Square Means (LSM) ± SE. Mean comparisons were made using Turkey's studentized range test method at $P<0.05$.

III. Results and Discussion

a) Characterization of the Poultry Production System

i. Socio-economic status and respondent's profile

General characteristics of the respondents studied were presented in Table 1. From the total interviewed village chicken owners in the study area, more than half (72.78 %) and (27.22 %) were male and females, respectively. The average age of respondents

© 2016 Global Journals Inc. (US)

was 36.91 years in north-bench, 39.73 years in Sheko and 35.63 years in south-bench.

ii. *Purpose of keeping indigenous chickens*

Importance and uses of poultry production in the context of smallholder farmers were multi-directional (Table 2). The results of rankings from north-bench and sheko districts had shown that chickens as source of egg production was the first and second in south-bench district. From the result of ranking in all districts the purpose of egg for hatching was the first most important. This is similar to Fisseha *et al*. (2010a) who reported that the use of eggs for hatching (71.7%) was the first function of eggs in Bure woreda of northwest Amhara.

b) Flock composition and characteristics

The mean values of chickens in different age category and proportion of the respondent owning different size of chickens are shown in Table 3. The value reported in this work is higher than 7.10 chickens per household reported by Tadelle and Ogle (1996) for the central highlands of Ethiopia and 8.8chickens per household reported by Asefa (2007) for Awassa Zuria and lower than the case reported by Fisseha *et al.,* (2010b) which reported a mean flock size of 13 and 12 chickens per household for Bure and Fogera woreda in Ethiopia, respectively.

i. *Feeding*

All chicken owners provided supplementary feed. Inadequate of supplementary feed is one of the characteristics of a free-ranging backyard poultry production system (Gueye, 2003). However, in this study 100 % of the respondents practiced scavenging system with supplementary feeding (Table 4). This is similar with the findings of Zemene *et al.* (2012) who reported 100% chicken owners in west Amhara region provided supplementary feed. Another study in Dale, Wonsho and Loka Abaya Woreda's of southern nation nationality people regional state, (Mekonen, (2007) indicated that 98.1 % of the households offer supplementary feed. All of the respondents who practiced supplementary feeding system used home grown crops such as maize, sorghum, wheat, banana and household scraps to feed their chickens.

ii. *Watering*

Concerning the frequency of watering, more than half of chicken producers (57.78%) provided water adlibitum (making water available every time) (Table 5). Halima (2007) also reported that 99.5% of chicken owners in north-west Amhara provided water to village birds. The source of water, the water given to chickens was drawn from rivers (72.22%), and hand operated (27.78%). The present study also indicated that all chicken owners (100%) had watering trough. Broken clay material, (locally called *"shekila")*, wooden trough, plastic made through and metal made trough were used as watering trough in all districts.

iii. *Housing*

Housing is the most important to chickens as it protects them against predators, theft, rough weather and provides shelter for egg laying and broody hen. This result is similar with the case reported by Mekonen (2007), Meseret (2010) and Eskinder (2013) who reported 97.6 % in Dale, Wonsho and Loka Abaya Woreda's of southern nation nationality people regional state, 94.4% in Gomma woreda and 92.06% in both Horro and Jarso respectively. However, the result contradicts the reports of Halima (2007) and Bogale (2008) who evidenced that, majority of the rural households (51%) of northwest Ethiopia and 59.7% of Fogera woreda had separate sheds for their chickens, respectively.

c) Culling practice and factors determining culling

In the study district, respondents have their own criteria and strategies of culling chicken. The determinant factors of culling chicken are given in Table 7. As the result from the table indicated, most of the respondents in north-bench (66.67%), Sheko (65%) and south-bench (56.67 %) had their own indigenous knowledge of culling chicken for the reason of poor productivity, old age and illness. This result is in agreement with the case reported by Halima (2007) who reported 74.7% of the respondents in northwest Ethiopia cull their chicken because of poor productivity and old age.

d) Traditional methods of breaking broodiness

Traditional methods for breaking broodiness are given in Table 8. 'Although broodiness in local chicken is an important trait and the most essential means of egg incubation'. It is one of the major reasons for the low egg productivity. Almost all of the respondents indicated that broodiness characteristics were common in their flock in which 78.34% in north- bench, 63.32 % in Sheko and 81.67% in south-bench practiced the traditional methods hanging upside down, tying wings, taking to another place and hide brooding nest of breaking broodiness that a hen resumes laying of eggs in order to increase the number of eggs obtained from a single chicken in a certain period of time.

e) Egg incubation, hatchability and Chick survival

Average number of eggs set to broody hen, average hatch rate, percentage of hatchability, survival rate of chicks to 8 weeks age and its percentage are given in Table 9. The frequency of egg set to broody hen/year was 1.95 in north-bench, 1.98 in sheko and 2.10 in south-bench, average number of eggs set to broody hens was 12.11 in north-bench, 11.72 in sheko and 11.27 in south-bench of which the average percentage of hatchability was 77.97% in North bench, 75.51% in Sheko and 80.92% in South bench. This

© 2016 Global Journals Inc. (US)

hatchability percentage seems relatively satisfactory as Sonaiya and Swan (2004) reported, hatchability using a broody hen around 80% to be normal, but a range of 75% to 80% is considered to be satisfactory. Similarly this hatchability performance is less than that of village hens reported by different researchers as follows: a hatchability performance of 82.6% was reported in Bure woreda, Ethiopian local breed chicken by Fisseha *et al*., (2010a) and an average hatchability of 82% reported in communal area of Zimbabwe by Kusina*et al.*, (2000). However, this hatchability performance is more than the 70.5% obtained by Tadelle (2003) for five regions in Ethiopia.

f) Reproductive and Productive performance of local chicken

The mean age at first lay, number of clutches per hen per year and number of eggs per clutch per hen are given in Table 10. According to the current study, the average age at first lay of village chicken and the average age at first mating were significant ($P<0.05$) among the study districts. North-bench and South-bench had relatively higher values which is 5.92 and 5.82 months for mean age of female at first lay, and 5.77 and 5.83 months for mean age of male at first mating, respectively, Sheko had lower values which is 5.50 months for mean age of female at first lay and 5.61 months for mean age of male at first mating. This shows pullets and cockerels found in sheko relatively matured faster than chicken of the other districts. The overall mean age at first lay (5.75 months) recorded in this study was similar with Mammo (2006) and Halima (2007), who reported 5.35 and 5.5 months of mean age at first lay respectively for chickens and shorter than 6.8 months reported by Tadelle *et al.*(2003). The overall mean age at first mating for cockerels (5.74 months) is in agreement with the findings of Halima (2007) and Bogale (2008), who reported 5.5 and 5.87 months respectively and shorter than 6.15 month reported by Fisseha *et al.,* (2010a).

The average number of clutches per hen per year of village chicken were non-significant ($P<0.05$) among the study districts (Table 10). North-bench chickens had (3.65) mean number of clutch per hen per year, sheko (3.67) and south-bench (3.64) chickens, respectively. The overall mean number of clutch per year (3.65) recorded in this study was lower than Fisseha *et al.*(2010b) and Eskinder (2013) who reported 3.83, 5.2 and 3.94 per year respectively. This might indicate the variation of broodiness behavior among the Ethiopian ecotypes. The number of eggs per clutch found in the current study was 14.43, 14.74 and 14.81 in north-bench, sheko and south-bench respectively. The number of eggs per clutch found in this study agrees with the reported values of 15.0 and 12.94, 15.7 and 14.9 eggs in Horro, Jarso, Bure and Dale Woreda's, respectively. (Eskinder 2013,Fisseha *et al.*2010b) and lower than the 17.7 average eggs per clutch per hen reported by Tadelle (2003) for five regions in Ethiopia. Accordingly, the total egg production per hen per year of local hens was estimated to be 52.34, 53.94 and 53.71 innorth- bench, sheko and south-bench, respectively.

g) Effective population size and rate of inbreeding

The current study showed that 76.67 % in north-bench, 73.33 % in sheko and 70.00% in south- bench respondents had their own breeding cocks while the rest shared breeding males with neighbors (Table 11). To get some impression on the effective population size and rate of inbreeding over generations, effective population size was calculated based on the flocks of farmers who possessed their own breeding males. As shown in Table 11, the effective population size ranged from 4.79 (north-bench) to 3.81 (sheko) and 3.79 (south-bench) which implies the number of breeding individuals was very small. This result was smaller than the reported effective population size of 4.17 for Mandura, 4.94 for Horro and 5.22 for Konso village chickens by Nigussie *et al.*(2010a) and the present study is in line with effective population size of 3.73 and 4 for Horro and Jarso, respectively reported by Eskinder (2013).

h) Health management and disease

The results pertaining to disease outbreak among the chickens in the studied districts are presented in Table 12. The result indicated that 68.33% in north-bench, 63.33% in sheko and 48.33% in south-bench village chicken owners experienced chicken disease outbreaks in the last 12 months. During farmer group discussions, the major diseases and parasites easily recognized by the villagers were Newcastle disease (*'fingile')* and lice (Q*inqin* or *susii)*, respectively.The results also indicated that a traditional treatment (ethno-veterinary) was the major type oftreatment used by majority of village chicken owners in all the study districts for diseases like Newcastle. Accordingly, provision of local alcohol ('*Katikala or areqe'*), 'kerebicho'through smoking, lemon (*citrus limon*), '*Feto'* (Brasica spp), garlic (Allium sativum), andhuman antibiotics like tetracycline mixed with feed and/or drinking water and bleeding ofwing veins of sick birds against Newcastle disease were the most widely used type oftraditional treatments.

i) Challenges of village chicken production system

The rankings had shown that disease and predator were the major and economically important constraints for the production system of the districts (Table.13). Although predation was mentioned as an important problem in the entire study district, it is identified as a major economically important constraint in village chicken production system. The group discussion result revealed that there are problems associated with predators in all studied districts such as

© 2016 Global Journals Inc. (US)

wild birds of prey (locally called "chilfit"); cats (both domestic and wild) and dogs. Similarly, the results of a study by Mekonen (2007) in southern region of Ethiopia Halima (2007) in north-west Ethiopia and Zemene (2011) from Amhara region indicated that predators are the major constraints in village chicken.

Table 1 : Socio-economic characteristics of the respondents in village chicken production system.

Parameters	Districts			Over all
	North bench	Sheko	South bench	
Age of the respondents	36.91±0.93ab	39.73±0.97a	35.63±0.77b	37.42±0.89
Family size/HH	5.80±0.33	5.27±0.23	5.48±0.22	5.52±0.26
Sex		(frequency, (%)		
Male	46 (76.67)	42 (70.00)	43 (71.67)	131 (72.78)
Female	14 (23.33)	18 (30.00)	17 (28.33)	49 (27.22)
Educational background				
Illiterate	14 (23.33)	11 (18.33)	22 (36.67)	47 (26.67)
Read & write	29 (48.33)	17 (28.33)	4 (6.67)	50 (27.78)
Primary education	13 (21.67)	25 (41.67)	27 (45.00)	65 (36.11)
Secondary education	4 (6.67)	7 (11.67)	7 (11.67)	18 (10)
Livestock holding/HH		Mean ±SE		
Cattle	4.03±0.25a	2.45±0.13b	2.63±0.18b	3.04±0.19
Sheep	2.75±0.27a	1.50±0.18b	1.40±0.17b	1.88±0.21
Total Chicken	11.62±0.83a	6.10±0.44b	9.58±0.72a	9.1±0.67
Goat	0.82±0.12a	0.70±0.17ab	0.32±0.11b	0.61±0.13
Donkey	0.12±0.05	-	0.03±0.02	0.05±0.03
Mule	0.05±0.03	-	0.02±0.01	0.05±0.03
Horse	0.08±0.04	0.05±0.04	-	0.04±0.03
Land holding/HH	1.21±0.10a	0.71±0.09b	0.49±0.02b	0.8±0.43

a, b, means with different superscript letters across a row are significantly different at p<0.05; ns= non significance, HH=interviewed households.

Table 2 : Purpose of village chicken rearing and eggs

Districts	Purpose of chickens			Purpose of egg		
	Income	Consumption	Egg production	Income	Consumption	Hatching
north bench						
Rank1	18	10	32	12	16	32
Rank2	31	20	7	29	18	13
Rank3	16	24	14	19	26	15
Index	0.38	0.27	0.35	0.31	0.31	0.38
Sheko						
Rank1	24	8	28	21	9	30
Rank2	31	9	19	30	11	17
Rank3	5	41	13	5	40	13
Index	0.39	0.23	0.38	0.36	0.25	0.39
south bench						
Rank1	30	9	21	23	8	29
Rank2	26	6	28	27	9	24
Rank3	4	45	11	10	43	7
Index	0.41	0.23	0.36	0.37	0.24	0.39

Index=sum of [3 for rank 1 + 2 for rank 2 + 1 for rank 3] for particular trait divide by sum of [3 for rank 1+ 2 for rank 2 + 1 for rank 3] for all traits.

© 2016 Global Journals Inc. (US)

Table 3 : Chicken flock size per household by different age and sex groups

Age and sex	Districts								
	North-bench			Sheko			South-bench		
	Mean ± SE	Range	% N	Mean ± SE	Range	% N	Mean ± SE	Range	% N
Hens	4.18±0.37[a]	14	37.29	3.07±0.19[b]	8	48.17	3.52±0.32[ab]	17	37.45*
Cocks	1.68±0.19	8	15.01	1.38±0.15	5	21.73	1.30±0.16	5	13.81[ns]
Pullets	2.10±0.24[a]	10	18.72	0.93±0.18[b]	6	14.66	1.28±0.15[b]	4	13.63*
Cockerels	1.15±0.19[a]	8	10.25	0.32±0.10[b]	3	4.97	1.27±0.17[a]	5	13.45*
Chicks	2.10±0.47[a]	13	18.72	0.67±0.21[b]	7	10.47	2.05±0.43[a]	18	21.77
Average no. of chickens/ HH	11.62±0.83		-	6.10±0.44	-	-	9.58±0.72	-	-

a, b means in the same row with different superscripts are significantly different (P< 0.05); HH= household; SE= Standard error, ns= non –significance ,N= number of sample population.

Table 4 : Type and provision of supplementary feeding for chicken

Supplementary feeds (Percent)	Districts		
	North-bench	Sheko	South-bench
Provision of Supplementary feeding			
Yes	100	100	100
No	-	-	-
Type of supplementary feeds[a]			
Maize	100	66.67	100
Sorghum	86.67	70	80
wheat	-	3.33	-
Banana	11.67	6.67	3.33
Household scraps	30	23.33	43.33

[a]=Percentages do not add up to 100% since respondent's selected more than one feed type.

Table 5 : Source, Practice and frequency of watering for chickens

Factors	Districts			Overall mean
	North-bench	Sheko	South-bench	
Provision of water to chicken				
Yes	100	100	100	100
Source of water for chickens				
Pipe water (hand operated)	38.33	21.67	23.33	27.78
River	61.67	78.33	76.67	72.22
Frequency of watering				
Once a day	-	-	-	-
Twice a day	21.67	16.67	18.33	18.89
Three times a day	20	23.33	26.67	23.33
Offered freely (*ad libitum*)	58.33	60	55	57.78
Type of water Trough				
Brocken clay material	21.67	16.67	20	19.45
Wooden trough	18.33	15	21.67	18.33
Plastic made	45	55	46.67	48.89
Metal made trough	15	13.33	11.67	13.33

The present study also indicated that all chicken owners (100%) had watering trough.

© 2016 Global Journals Inc. (US)

Table 6 : Housing and reasons for not having separate shelter for chickens

Housing conditions (%)	Districts			Overall
	north-bench	sheko	south-bench	mean
Housing				
Perches in the veranda	6.67	8.33	3.33	6.11
Perches in the main house	80	73.33	75	76.11
Separate shelter	8.33	5	6.67	6.67
Perches in the kitchen	5	13.33	15	11.11
Reason not having separate shelter				
Risk of theft	43.33	26.67	16.67	28.89
Less attention given to poultry	20	28.33	23.33	23.89
Risk of predators	13.33	11.67	28.33	17.78
Lack of construction material	15	26.67	21.67	21.11
Small flock size	8.33	6.67	10	8.33

Table 7 : Culling practice and factors determining culling

Factors (%)	district			
	North-bench	Sheko	South-bench	Overall mean
Culling practices				
Yes	66.67	65	56.67	62.78
No	33.33	35	43.33	37.22
Factors determining Culling [a]				
Poor productivity	45	43.33	41.66	43.33
Unwanted plumage color	21.67	23.33	26.67	21.11
Old age	25	23.33	18.33	22.22
Illness	11.67	10	15	12.22
Excess in number	3.33	5	1.67	3.33

[a]= *Percentages do not add up to the specific values since respondents selected more than one determinant factor.*

Table 8 : Traditional methods of breaking broodiness

Factors (%)	district		
	North-bench	Sheko	South-bench
Breaking broodiness			
Yes	75	61.67	63.33
No	25	38.33	36.67
Factors determining breaking broodiness [a]			
Hanging upside down	15	13.33	18.33
Tying wings	21.67	18.33	16.67
Taking to another place	25	23.33	26.67
hide brooding nest	10	5	8.33
Put other materials on brooding nest	6.67	3.33	11.67
Nothing	21.67	36.67	18.33

[a]= *Percentages do not add up to the specific values since respondents used more than one determinant factor.*

Table 9 : Hatchability performance of local hens in north-bench, sheko and south-bench districts

Variables	Districts			Over all
	north-bench	sheko	south-bench	mean
egg set to broody hen/year (Mean±SE)	1.95±0.03[b]	1.98±0.02[b]	2.10±0.04[a]	2.01±0.03*
Average number of eggs set to broody hen (Mean±SE)	12.11±0.20[a]	11.72±0.28[ab]	11.27±0.16[b]	11.7±0.21*
Average hatch rate (Mean±SE)	9.20±0.21[a]	8.85±0.19[a]	9.12±0.17[a]	9.06±0.19[ns]
Hatchability (%)	75.97	75.51	80.92	77.47
Survival rate of chicks to 8 weeks age (Mean±SE)	6.00±0.18[a]	5.78±0.16[a]	6.28±0.16[a]	6.02±0.17 [ns]
Survival rate of chicks to 8 weeks age (%)	65.22	65.31	68.85	66.46

[a, b] *means in the same row with different superscripts are significantly different ($P < 0.05$); SE= Standard error.*

© 2016 Global Journals Inc. (US)

Table 10 : Reproductive andproductive performance of local chicken ecotypes.

Traits (Mean ± SE)	Districts			Over all mean
	north-bench	sheko	south-bench	
Average age of cockerels at 1st mating (month)	5.77±0.08[a]	5.61±0.08[b]	5.83±0.08[a]	5.74±0.08*
Average age of pullets at 1st egg laying (month)	5.94±0.07[a]	5.50±0.06[b]	5.82±0.08[a]	5.75±0.07*
Number of clutches/hen/year	3.65±0.06[a]	3.67±0.06[a]	3.64±0.06[a]	3.65±0.06[ns]
Average number of eggs/clutch	14.43±0.15[a]	14.74±0.14[a]	14.81±0.13[a]	14.66±0.59[ns]
Estimated total egg production/ hen/year	52.34±0.77[a]	53.94±0.78[a]	53.71±0.83[a]	53.33±0.79[ns]

[a, b] means in the same row with different superscripts are significantly different (P < 0.05); SE=Standard error.

Table 11 : Effective population size and level of inbreeding

Factors	Districts			
	north-bench	sheko	south-bench	overall mean
Farmers rearing own breeding males (%)	76.67	73.33	70	73.33
Farmers not having breeding males (%)	23.33	26.67	30	26.67
Nm	1.68	1.38	1.3	1.45
Nf	4.18	3.07	3.52	3.59
Ne	4.79	3.81	3.79	4.13
ΔF	0.104	0.131	0.132	0.122

Nm= Number of breeding male, Nf= Number of breeding female, Ne= Effective population size ΔF= Rate of inbreeding.

Table 12 : Diseases and health management of chickens

Parameters	Districts		
	north-bench	sheko	south-bench
Experience of disease outbreak (%)			
Yes	41 (68.33%)	38 (63.33%)	29(48.33%)
No	19 (31.67)	22 (36.67%)	31(51.67%)
Measures taken when chicken sick (%)			
Treat with traditional medicine	43(71.67%)	47(78.33%)	44(73.33%)
service of veterinarian	5(8.33)	4(6.67%)	7(11.67%)
No action	12(20%)	9(15%)	9(15%)

Table 13 : Constraints of chicken production

District		Disease	predator	Theft	External parasite	Feed shortage	Lack of housing	Low poor-ductility	Lack of veterinarians
					problems				
North bench	Rank1	27	15	3	4	3	5	2	1
	Rank2	7	9	8	5	7	3	5	3
	Rank3	3	5	4	5	4	7	6	5
	Index	0.31	0.22	0.09	0.09	0.09	0.09	0.07	0.04
Sheko	Rank1	29	13	-	5	6	5	2	-
	Rank2	8	10	7	6	9	7	5	3
	Rank3	4	6	3	7	6	9	8	7
	Index	0.31	0.19	0.05	0.1	0.12	0.11	0.07	0.04
South Bench	Rank1	16	23	-	7	5	3	1	5
	Rank2	15	11	-	8	6	5	4	3
	Rank3	13	9	-	-	8	6	7	5
	Index	0.27	0.30	-	0.11	0.11	0.08	0.05	0.08

Index=sum of [3 for rank 1 + 2 for rank 2 + 1 for rank 3] for particular trait divide by sum of [3 for rank 1 + 2 for rank 2 + 1 for rank 3] for all traits.

© 2016 Global Journals Inc. (US)

IV. Conclusions

The chicken production system of the study districts is a backyard extensive production system where local chicken ecotypes are managed mainly on scavenging with seasonal/conditional feed supplementation, especially during feed shortage and the major source of these supplementary feeds were home grown grains and household leftovers/by products. All chicken owners of the study area provided water to birds, especially during the dry season and river water was the major source of drinking water for village chicken in the study area. Only a few of the village chicken owners provided separate housing for their birds, but most of them shared their main houses with the chickens. The average flock sizes in the study districts were fairly more than the reports for most of other places in Ethiopia. The effective population size found in this study was very small which implies the number of breeding males and females was very small. Subsequently, high rate of inbreeding coefficient were estimated.

References Références Referencias

1. Alders, R.G., 2004. Poultry for profit and pleasure.FAO Diversification Booklet 3.Rome.
2. Asefa, T. 2007.Poultry management practices and on farm performance evaluation of Rhode Island Red (RIR), Fayoumi and local chicken in Umbullo Wachu watershed. M.Sc. thesis. Department of animal and range sciences, Hawasa College of agriculture, Awassa, Ethiopia.
3. Bogale Kibret, 2008. *In situ* characterization of local chicken ecotype for functional traits and production system in Fogera woreda, Amhara regional state. Msc Thesis. Submitted to the Department of Animal Science. Haramaya University. Ethiopia. Pp.123.
4. CSA (Central Statistical Agency), 2012/2013. Agricultural Sample Survey, report on livestock and livestock characteristics (Private Peasant Holdings). Federal democratic republic of Ethiopia.
5. Eskinder Aklilu, 2013. *On-farm* phenotypic characterization of indigenous chicken and chicken production systems in horro and Jarso districts, Oromia regional state.Msc Thesis. Submitted to the Department of Animal and Range Science. Haramaya University. Ethiopia. Pp.94.
6. Fisseha Moges, Abera Mellesse and Tadelle Dessie, 2010a.Assessment of village chicken production system and evaluation of the productive and reproductive performance of local chicken ecotype in Bure district, Northwest Ethiopia. *African Journal of Agricultural Research* Vol. 5(13), pp. 1739-1748.
7. Fisseha Moges, Azage Tegegne and Tadelle Dessi, 2010b. Indigenous chicken production and marketing systems in Ethiopia: Characteristics and opportunities for market-oriented development. IPMS (Improving Productivity and Market Success) of Ethiopian farmers working paper no 24 Nairobi, Kenya, and ILRI.
8. Fisseha, 2009.Studies on production and marketing systems of local chicken ecotypes in Bure woreda, north-west Amhara Regional State. Msc Thesis. Submitted to the Department of Animal and Range Science. Hawasa University. Ethiopia. Pp.185.
9. Gueye, E.F., 2002. Family poultry research and development in low income food deficit countries: approaches and prospects. Outlook on Agriculture. Volume 31, Number 1. Pp32
10. Halima Hassen, 2007. Phenotypic and genetic characterization of indigenous chicken populations in North-West Ethiopia. Ph.D Thesis. Submitted to the faculty of natural and agricultural sciences department of animal, wildlife and grassland Sciences. University of the Free State, Bloemfontein, South Africa. Pp186
11. Kusina J., N.T. Kusina and J. Mhlanga. 2000. A Survey on Village Chicken Losses: Causes and Solutions as perceived by farmers in communal area of Zimbabwe. Accessed on 27th August, 2007.
12. Mekonen G/gziabher, (2007). Characterization of the small holder poultry production and marketing system of Dale, Wonsho and Loka Abaya woredas of SNNPRS, Ethiopia. M.Sc Thesis. Hawasa University, Ethiopia, Pp. 95
13. Meseret Molla, 2010. Characterization of village chicken production and Marketing system in gomma woreda, jimma zone. Jimma University, Ethiopia. 110 pp. (M.Sc. thesis).
14. Nigussie Dana, Liesbeth H. van der Waaij, Tadelle Dessie, and Johan A. M. van Arendonk. 2010a. Production objectives and trait preferences of village poultry producers of Ethiopia: implications for designing breeding schemes utilizing indigenous chicken genetic resources *Tropical Animal Health and Production journal*. 42(7): 1519–1529.
15. SAS (Statistical Analysis System), 2008. SAS Institute Inc., Cary, NC, USA.V.9.2
16. Serkalem Tadesse, Hagos Ashenafi and Zeleke Aschalew, 2005.Sero-prevalence study of Newcastle disease in local chickens in central Ethiopia. *International Journal of Applied Research. Vet. Med.* Vol. 3, No. 1.
17. Sonaiya, E.B. and E.S.J. Swan, 2004.Small scale poultry production technical guide. Animal Production and Health, FAO of United Nations. Rome Italy, 2004. 114p.
18. Tadelle, D. and B. Ogle, 2001 Village poultry production systems in the central high lands of Ethiopia Tropical Animal Health and Production, 33(6): 52 1-537.
19. Tadelle Dessie, 2003. Phenotypic and genetic characterization of chicken ecotypes in Ethiopia. Ph.D Thesis. Humboldt University, Germany. Pp216.

© 2016 Global Journals Inc. (US)

20. Tadelle Dessie, 1996. Studies on village poultry production systems in the central highlands of Ethiopia. M.Sc Thesis, Swedish University of Agricultural sciences.
21. Zemene Worku, 2011. Assessment of village chicken production system and the performance of local chicken populations in West Amhara Region of Ethiopia. Msc Thesis. Submitted to the Department of Animal and Range Science. Hawasa University. Pp212
22. Zemene Worku, Aberra Melesse, Yosef T/Giorgis, 2012.Assessment of village chicken production system and the performance of local chicken populations in west Amhara Region of Ethiopia. *Anim. Prod. Adv. J.*, 2(4): 199-207.

© 2016 Global Journals Inc. (US)

Global Journal of Science Frontier Research: D
Agriculture and Veterinary
Volume 16 Issue 2 Version 1.0 Year 2016
Type : Double Blind Peer Reviewed International Research Journal
Publisher: Global Journals Inc. (USA)
Online ISSN: 2249-4626 & Print ISSN: 0975-5896

Drug Resistance Pattern of *Staphylococcus* in Poultry in Central and Southern Ethiopia

By Fitsum Tessema, Fufa Abunna, Reta Duguma, Takele Beyene, Asmamaw Bihonegn, Teklemariam Worku, Biyansa Adugna & Mulualem Almazu

Addis Ababa University, Ethiopia

Abstract- This study was conducted from November 2014 - May 2015 to determine the antimicrobial resistance pattern of Staphylococcus species in poultry in Central and Southern Ethiopia. 205 staphylococcal species isolated from poultry were evaluated using disk diffusion method for their antimicrobial susceptibility to 10 different antimicrobial drugs. Staphylococcus were found to be highly susceptible to Ciprofloxacin (85.4%) followed by Sulfamethoxazole-Trimethoprim (68.8%). However these isolates were highly resistant to Penicillin G (94.1%) and Tetracycline (79%) followed by Amoxicillin (60.5%). From all Staphylococci isolates tested for drug susceptibility pattern, only 1 isolate (S. aureus) was susceptible to all tested drugs and 99.51% of isolates were resistant to at least one of the antibiotics tested. Coagulase negative Staphylococci were highly resistant to all tested drugs except Ciprofloxacin (0%) and S. aureus were highly resistant to Penicillin G (92.2%) and Tetracycline (74.5%). Staphylococcus species isolated in poultry in Central and Southern Ethiopia were all multidrug resistant.

Keywords: drug resistance, ethiopia, poultry, staphylo-coccus.

GJSFR-D Classification : FOR Code: 830309

DRUGRESISTANCEPATTERNOFSTAPHYLOCOCCUSINPOULTRYINCENTRALANDSOUTHERNETHIOPIA

Strictly as per the compliance and regulations of :

© 2016. Fitsum Tessema, Fufa Abunna, Reta Duguma, Takele Beyene, Asmamaw Bihonegn, Teklemariam Worku, Biyansa Adugna & Mulualem Almazu. This is a research/review paper, distributed under the terms of the Creative Commons Attribution-Noncommercial 3.0 Unported License http://creativecommons.org/licenses/by-nc/3.0/), permitting all non commercial use, distribution, and reproduction in any medium, provided the original work is properly cited.

Drug Resistance Pattern of *Staphylococcus* in Poultry in Central and Southern Ethiopia

Fitsum Tessema [α], Fufa Abunna [σ], Reta Duguma [ρ], Takele Beyene [ω], Asmamaw Bihonegn [¥], Teklemariam Worku [§], Biyansa Adugna [χ] & Mulualem Almazu [v]

Abstract- This study was conducted from November 2014 - May 2015 to determine the antimicrobial resistance pattern of Staphylococcus species in poultry in Central and Southern Ethiopia. 205 staphylococcal species isolated from poultry were evaluated using disk diffusion method for their antimicrobial susceptibility to 10 different antimicrobial drugs. Staphylococcus were found to be highly susceptible to Ciprofloxacin (85.4%) followed by Sulfamethoxazole-Trimethoprim (68.8%). However these isolates were highly resistant to Penicillin G (94.1%) and Tetracycline (79%) followed by Amoxicillin (60.5%). From all Staphylococci isolates tested for drug susceptibility pattern, only 1 isolate (S. aureus) was susceptible to all tested drugs and 99.51% of isolates were resistant to at least one of the antibiotics tested. Coagulase negative Staphylococci were highly resistant to all tested drugs except Ciprofloxacin (0%) and S. aureus were highly resistant to Penicillin G (92.2%) and Tetracycline (74.5%). Staphylococcus species isolated in poultry in Central and Southern Ethiopia were all multidrug resistant. Therefore further investigations have to be done thoroughly on the molecular epidemiology and routes of transmission of Staphylococcus and exchange of resistance encoding genes of different Staphylococcus strains between different hosts.

Keywords: drug resistance, ethiopia, poultry, staphylococcus.

I. Introduction

Staphylococci are considered to be of the most common causes of infections in birds. Most infections are caused by coagulase positive *Staphylococci*, especially *Staphylococcus aureus*, but also coagulase negative *Staphylococci* seem to be associated with infections (Suleiman *et al*., 2013). The *Staphylococci* are ubiquitous in nature, with humans and animals as the primary reservoirs. It is commonly found in poultry house environment and can be isolated from the litter, dust and feathers. The bacterium is considered to be a normal resident of the chicken, located on the skin and feathers and in the respiratory and intestinal tracts. A *staphylococcus* infection, or *Staphylococcosis*, refers to a variety of diseases in poultry caused by *staphylococci* bacteria (Jensen and Miller, 2001).

The emergence of antibacterial resistance among pathogens that affect animal health is of growing concern in veterinary medicine as these resistant pathogens in animals have been incriminated as a potential health risk for humans (Moon *et al*., 2007). The rise of drug-resistant virulent strains of *Staphylococci* is a serious problem in the treatment and control of staphylococcal infections both in humans and animals. Staphylococcal infection is now a major public health problem and the poultry meat has been implicated as a main source of infection in humans (Duran *et al*., 2012).

Staphylococcus is now a serious problem worldwide due to its ubiquitous nature and the existence of highly antibiotic resistant isolates. Thus the objective of this study was to evaluate the drug resistance pattern of *Staphylococcus* isolated from poultry in central and southern Ethiopia.

II. Methodology

Staphylococcus species were isolated from poultry from Central (Bishoftu, Adama, AddisAbaba) and Southern (Hawassa and Wolayta) Ethiopia according to the procedures kept in Quinn *et al* (2002) and a total of 205 species were isolated and evaluated using disk diffusion method for their antimicrobial susceptibility to 10 different antimicrobial drugs which were Amoxicillin, Ciprofloxacin, Tetracycline, Erythromycin, Nalidixic Acid, Nitrofurantoin, Streptomycin, Penicillin G, Sulfamethoxazole- Trimethoprim and Vancomycin. Antimicrobial susceptibility testing was carried out in accordance with the guidelines published by the Clinical and Laboratory Standards Institute (formerly the National Committee for Clinical Laboratory Standards, 2014).

III. Result

In this study, *Staphylococcus* were found to be highly susceptible to Ciprofloxacin (85.4%) followed by Sulfamethoxazole-Trimethoprim (68.8%). However these isolates were highly resistant to Penicillin G (94.1%) and Tetracycline (79%) followed by Amoxicillin (60.5%). The antimicrobial resistance profiles of *Staphylococcus* at genus level and by species level are shown in Table 1 and Table 2, respectively.

Corresponding Author α: Areka Agricultural Research Center, P.O.Box 79, Areka, Ethiopia. e-mail: fitse_12te@yahoo.com
Author σ ρ ω ¥ § χ: Addis Ababa University, College of Veterinary Medicine and Agriculture, P.O.Box 34, Bishoftu, Ethiopia.
Author v: Wolayta Sodo Regional Veterinary Laboratory, P.O.Box 82, Wolayta Sodo, Ethiopia.

© 2016 Global Journals Inc. (US)

Table 1 : Resistance of *Staphylococcus* isolates to different antimicrobials (n = 205)

Antimicrobials	Resistant No. (%)	Intermediate No. (%)	Susceptible No. (%)
Amoxicillin	124(60.5)	-	81(39.5)
Ciprofloxacin	9(4.4)	21(10.2)	175(85.4)
Tetracycline	162(79)	12(5.9)	31(15.1)
Erythromycin	115(56.1)	57(27.8)	33(16.1)
Nalidixic Acid	80(39)	34(16.6)	91(44.4)
Nitrofurantoin	118(57.6)	39(19)	48(23.4)
Streptomycin	116(56.6)	36(17.6)	53(25.9)
Penicillin G	193(94.1)	-	12(5.9)
Sulfamethoxazole-Trimethoprim	42(20.5)	22(10.7)	141(68.8)
Vancomycin	122(59.5)	-	83(40.5)

From all *Staphylococci* isolates tested for drug susceptibility pattern, only 1 isolate (*S. aureus*) was susceptible to all tested drugs. Seven isolates were resistant to only one drug whereas 4 (3 *S. aureus* and 1 *S. hycus*) were resistant to Penicillin G and three *S. aureus* isolates were resistant to Tetracycline, Erythromycin and Nalidixic acid (each isolate for single drug). Coagulase negative *Staphylococci* were highly resistant to all tested drugs except Ciprofloxacin (0%). S. *aureus* were also highly resistant to Penicillin (92.2%), Tetracycline (74.5%), Amoxicillin (58.8%), Vancomycin (56.9%), Erythromycin (55.6%), Streptomycin (53.6%) and Nitrofurantoin (52.3%) (Table 2).

Table 2 : Resistance of *Staphylococcus* Species to different antimicrobials

Antimicrobials	Staph species	No of species	Resistance No (%)	Intermediate No (%)	Susceptible No (%)
Amoxicillin	CNS	35	25(71.4%)	-	10(28.6)
	S. *aureus*	153	90(58.8)	-	63(41.2)
	S. *hycus*	11	5(45.5)	-	6(54.5)
	S. *intermedius*	6	4(66.7)	-	2(33.3)
Ciprofloxacin	CNS	35	0(0%)	0(0%)	35(100%)
	S. *aureus*	153	7(4.6%)	20(13.1%)	126(82.4%)
	S. *hycus*	11	1(9.1%)	0(0%)	10(90.9%)
	S. *intermedius*	6	1(16.7%)	1(16.7%)	4(66.7%)
Tetracycline	CNS	35	33(94.3%)	1(2.9%)	1(2.9)
	S. *aureus*	153	114(74.5)	11(7.2%)	28(18.3)
	S. *hycus*	11	9(81.8)	0(0%)	2(18.2)
	S. *intermedius*	6	6(100%)	0(0%)	0(0%)
Erythromycine	CNS	35	21(60.0%)	12(34.3)	2(5.7%)
	S. *aureus*	153	85(55.6%)	42(27.5%)	26(17%)
	S. *hycus*	11	7(63.6%)	0(0%)	4(36.4%)
	S. *intermedius*	6	2(33.3%)	3(50%)	1(16.7%)
Nalidixic acid	CNS	35	21(60%)	7(20%)	7(20%)
	S. *aureus*	153	53(34.6%)	25(16.3)	75(49%)
	S. *hycus*	11	3(27.3%)	1(9.1%)	7(63.6%)
	S. *intermedius*	6	3(50%)	1(16.6)	2(33.3%)
Nitrofurantoin	CNS	35	30(85.7%)	1(2.9%)	4(11.4%)
	S. *aureus*	153	80(52.3%)	33(21.6%)	40(26.1%)
	S. *hycus*	11	4(36.4)	5(45.5%)	2(18.2%)
	S. *intermedius*	6	4(66.7)	0(0%)	2(33.3%)
Streptomycin	CNS	35	26(74.3%)	4(11.4%)	5(14.3%)
	S. *aureus*	153	82(53.6%)	29(19%)	42(27.5%)
	S. *hycus*	11	2(18.2%)	3(27.3%)	6(54.5%)
	S. *intermedius*	6	6(100%)	0(0%)	0(0%)
Penicillin G	CNS	35	35(100%)	-	0(0%)
	S. *aureus*	153	141(92.2%)	-	12(7.8%)
	S. *hycus*	11	11(100%)	-	0(0%)
	S. *intermedius*	6	6(100%)	-	0(0%)

© 2016 Global Journals Inc. (US)

Sulfamethoxazole - Trimethoprim	CNS	35	12(34.3%)	5(14.3%)	18(51.4%)
	S. *aureus*	153	26(17%)	17(11.1)	110(71.9%)
	S. *hycus*	11	0(0%)	0(0%)	11(100%)
	S. *intermedius*	6	4(66.7)	0(0%)	2(33.3%)
Vancomycin	CNS	35	28(80%)	-	7(20%)
	S. *aureus*	153	87(56.9%)	-	66(43.1%)
	S. *hycus*	11	4(36.4%)	-	7(63.6%)
	S. *intermedius*	6	3(50%)	-	3(50%)

a) Double Antimicrobial Resistance of the Isolated Staphylococcus

193 isolates were resistant to Penicillin G and 162 isolates were resistant to Tetracycline. The resistant isolates for two drugs Penicillin G and Tetracycline were 49. Therefore 113 isolates were resistant to Tetracycline and 144 isolates were resistant to Penicillin G without sharing each other (Table 3).

Table 3 : Staphylococcus isolates (n= 205) drug resistance pattern as assessed for single (shaded diagonal), double drug resistance (below diagonal) and the unshared isolate number in the double resistance (above diagonal)

	AML	CIP	TE	E	NA	F	S	P	SXT	VA
AML	124	117(2)	28(66)	56(47)	78(34)	56(50)	48(40)	0(69)	100(18)	49(47)
CIP	7	9	1(154)	2(108)	3(74)	3(112)	4(111)	0(184)	7(40)	7(120)
TE	96	8	162	64(17)	86(4)	54(10)	59(13)	113(144)	124(4)	56(16)
E	68	7	98	115	77(42)	42(45)	50(51)	7(85)	82(9)	40(47)
NA	46	6	76	38	80	21(59)	21(57)	4(117)	58(20)	22(64)
F	68	6	108	73	59	118	33(31)	2(77)	82(6)	32(36)
S	76	5	103	65	59	85	116	5(82)	82(8)	38(44)
P	124	9	49	108	76	116	111	193	154(3)	74(3)
SXT	24	2	38	33	22	36	34	39	42	9(89)
VA	75	2	106	75	58	86	78	119	33	122

AML: Amoxicillin, CIP: Ciprofloxacin, TE: Tetracycline, E: Erythromycin, NA: Nalidixic Acid, F: Nitrofurantoin, S: Streptomycin, P: Penicillin, SXT: Sulfamethoxazole - Trimethoprim, VA: Vancomycin

b) Multidrug Resistance Pattern of Staphylococci Species

Out of 153 *S. aureus* isolates screened against 10 different drugs, 146 isolates had resistance to $\geq$ 2 drugs. However, 6 isolates had single drug resistance whilst 1 isolate was susceptible to all drugs. Of the 146 *S. aureus* isolates that had resistance to $\geq$2 drugs, 11 isolates were resistant to 2 drugs, 17 isolates to 3 drugs, 25 isolates to 4 drugs, 31 isolates to 5 drugs, 21 isolates to 6 drugs, 37 isolates to 7 drugs and 4 isolates were resistant to 9 drugs (Table 4).

© 2016 Global Journals Inc. (US)

Table 4 : Multidrug resistance pattern of S. *aureus*

No of drug	Pattern (isolate)	No. of drug	Pattern (isolate)	No. of drug	Pattern (isolate)
2	AMLP (4)		AMLFSP(1)		TEENAFSP(1)
	FP(1)		AMLNAPVA(1)		TEEFPSXTVA(1)
	TENA(1)		AMLTEPVA(1)		TEENAFPVA(2)
	TEP(4)		ESPVA(1)		AMLTEEFPVA(3)
	SP(1)		TESPVA(1)		AMLTEEFSP(2)
3	TENAP(1)		AMLTEFP(1)		TEESPSXTVA(1)
	TENAVA(1)		TEESP(1)		AMLTEESPSXT(1)
	FPVA(1)	5	TENASPVA(1)		AMLTESPSXTVA(1)
	TEENA(1)		TENAFPVA(1)		AMLTEESPVA(2)
	AMLSP(4)		TEEFSP(5)	7	AMLTENAFSPVA(10)
	TEEF(1)		AMLEFPSXT(1)		TEEFSPSXTVA(4)
	TEEP(1)		AMLTEENAP(1)		AMLTEEFSPVA(3)
	ESP(1)		TEEFSSXT(1)		AMLCIPTEENAFP(1)
	TEPVA(2)		TEEFPVA(4)		AMLTEENASPVA(2)
	EFP(1)		AMLTEESP(1)		CIPTEENAFSP(2)
	EPVA(2)		AMLTENASP(1)		TEENAFSPSXT(2)
	AMLTEP(1)		AMLTEFSP(3)		AMLCIPTEENAFP(1)
4	FPSXTVA(1)		AMLTEEFP(3)		AMLTEENAPSXTVA(1)
	AMLSPVA(1)		AMLTEEPVA(4)		AMLCIPTEENAPVA(1)
	AMLTEES(1)		AMLTEPSXTVA(1)	8	AMLTEENAFSPVA(5)
	AMLEPVA(7)		AMLTESPVA(2)		AMLENAFSPSXTVA(1)
	AMLTESP(1)		TEFSPVA(1)		AMLTENAFSPSXTVA(1)
	AMLTEEP(1)		TEESPVA(1)		AMLCIPTEEFSPSXT(1)
	TEFPVA(2)	6	TENAFSPVA(4)		TEENAFSPSXTVA(2)
	AMLFSP(2)		TENAFSPVA(1)	9	AMLTEENAFSPSXTVA(3)
	AMLTENAP(2)		TEEFSSXTVA(2)		AMLCIPTEEFSPSXTVA(1)

AML: Amoxicillin, CIP: Ciprofloxacin, TE: Tetracycline, E: Erythromycin, NA: Nalidixic Acid, F: Nitrofurantoin, S: Streptomycin, P: Penicillin, SXT: Sulfamethoxazole - Trimethoprim, VA: Vancomycin

From 35 CNS isolates tested for drug resistance pattern 1 isolate was resistant to 3 drugs, 3 isolates to 4 drugs, 6 isolates to 5 drugs, 6 isolates to 6 drugs, 8 isolates to 7 drugs, 5 isolates to 8 drugs and 6 isolates were resistant to 9 drugs. From a total of 11 *S. hycus* isolates that were subjected to drug susceptibility test, 1 isolate was resistant to single drug and 10 isolates were multidrug resistant. From those isolates 2 isolates were resistant to 3 drugs, 4 isolates to 4 drugs, 2 isolates to 5 drugs, 1 isolate to 6 and 7 drugs each. Out of a total of 6 *S.intermedius* isolates that were tested for their drug resistancepattern, 1 isolate were resistant to 5 drugs, 2 isolates to 6 drugs, 2 isolates to 7 drugs and 1 isolate was resistant to 8 drugs (Table 5).

© 2016 Global Journals Inc. (US)

Table 5 : Multidrug resistance pattern of CNS, S. *intermidius* and S. *hycus*

No of drug	Pattern (isolates) CNS	No of drug	Pattern (isolates) *S.intermedius*
3	TENAP(1)	5	AMLCIPTESP (1)
4	FSPVA(1)	6	TENAFSPVA(1)
	AMLTEFP(1)		AMLTEESPSXT(1)
	AMLESP(1)	7	TENAFSPSXTVA(1)
5	AMLTENASP(1)		AMLTENAFSPSXT(1)
	TENAFPVA(2)	8	AMLTEEFSPSXTVA(1)
	AMLTEEFP(1)		
	AMLTEEPVA(1)	No of drug	Pattern (isolates) *S.hycus*
	TEENAPVA(1)	1	P(1)
6	TENAFSPVA(2)	3	AMLTEP(1)
	AMLTEFSPVA(2)		TEEP(1)
	AMLTEEFPVA(1)	4	AMLTEEP(2)
	AMLTEENAFP(1)		AMLCIPNAP(1)
7	AMLTENAFSPVA(3)		TEENAP(1)
	TENAFSPSXTVA(1)	5	TEEFPVA(2)
	AMLTEEFSPVA(3)	6	TEEFSPVA(1)
	AMLTEEFSPSXT(1)	7	AMLTENAFSPVA(1)
8	AMLTEEFSPSXTVA(2)		
	TEENAFSPSXTVA(2)		
	AMLTEENAFSPVA(1)		
9	AMLTEENAFSPSXTVA(6)		

AML: Amoxicillin, CIP: Ciprofloxacin, TE: Tetracycline, E: Erythromycin, NA: Nalidixic Acid, F: Nitrofurantoin, S: Streptomycin, P: Penicillin, SXT: Sulfamethoxazole - Trimethoprim, VA: Vancomycin

IV. Discussion

In the present study *Staphylococcus* were found to be highly susceptible to Ciprofloxacin (85.4%) followed by Sulfamethoxazole-Trimethoprim (68.8%). However these isolates were highly resistant to Penicillin G (94.1%) and Tetracycline (79%) followed by Amoxicillin (60.5%). This result indicated that most of the *Staphylococci* isolates were susceptible to Ciprofloxacin which is lower than the result of Suleiman *et al*. (2013) who reported that 100% isolates were susceptible to Ciprofloxacin.

Most researches were directed to antibiotic resistance of *Staphylococci* isolated from food producing animals and their products focusing on the *S. aureus* species, whereas less attention is paid to the group of coagulase-negative *Staphylococci*. In this study coagulase negative *Staphylococci* were highly resistant to all tested drugs except Ciprofloxacin (0%). The result of Heba *et al*. (2014) reported that 33.3 % of CNS was resistant to Ciprofloxacin. This could be due to the differences in source of the isolated CNS in the different study areas. The present study presented that CNS were resistant to Penicillin G (100%), Tetracycline (94.3%), Nitrofurantoin (85.7%), Vancomycin (80%), Streptomycin (74.3%), Amoxicillin (71.4%), Erythromycin (60%), Nalidixic acid (60%) and Sulfamethoxazole – Trimethoprim (34.3%). Results of a study by Heba *et al*., (2014) showed that 87% of coagulase negative *Staphylococci* strains were resistant to Erythromycin that is higher than the present study (60%).

S.aureus were also highly resistant to Penicillin G (92.2%), Tetracycline (74.5%), Amoxicillin (58.8%), Vancomycin (56.9%), Erythromycin (55.6%), Strept-omycin (53.6%) and Nitrofurantoin (52.3%). This finding is in accordance with Abera *et al.* (2013) who reported *S.aureus* isolates resistant to Penicillin G were 94.4%. The present study disagrees with the result of Koksal *et al*. (2007) who found 0% resistance of *S.aureus* to Vancomycin. The differences in those results might be due to the differences in sample source and sample type of the isolates that were subjected to the test.

From all *Staphylococci* isolates tested for drug susceptibility pattern, only 1 isolate (*S.aureus*) was

© 2016 Global Journals Inc. (US)

susceptible to all tested drugs and 99.51% were resistant to at least one of the antibiotics tested. This finding is higher than the result of Geidam *et al*. (2012) who reported the result of 33.4% of *Staphylococci* were resistant to at least one of the antibiotics tested. This difference could be due to the differences in type of species isolated and type of drugs used on susceptibility test or due to the differences on the intensity of drug use and misuse. Out of 153 *S. aureus* isolates screened against 10 different drugs, 107 isolates (69.93%) were resistant to $\geq$ 4 drugs. This finding is comparable with the report of Geidam *et al*. (2012) who reported a total of 77.2% of *S.aureus* isolates that were resistant to $\geq$ 4 drugs.

V. Conclusion

According to the present study the *Staphylococci* species isolated from poultry were resistant to almost all drugs in which all *Staphylococci* were multidrug resistant except one isolate. The indiscriminate use of antimicrobial agents for prophylactic as well as other therapeutic purpose could be the reasons for increased antimicrobial resistance of *Staphylococci*. Exchange of resistance encoding genes among *Staphylococci* from different reservoirs (humans, poultry, and poultry products) is possible, but it is not known to what level this happens. Not only that chickens are at risks, poultry farm and abattoir workers and consumers are equally exposed to serious hazards due to multidrug resistance *Staphylococci*. Therefore restrictions on the irrational use of antibiotics should be applied and establishment of standardized monitoring systems in poultry farms are required. The extent of exchange of resistance encoding genes among *Staphylococci* from humans, poultry and poultry products in Ethiopia has to be investigated extensively.

VI. Acknowlegements

The authors would like to thank Southern Agricultural Research Institute, Addis Ababa University and Wolayta Sodo Regional Veterinary Laboratory for financial support and laboratory work.

References Références Referencias

1. Abera B., Diriba L. and Iticha I. (2013): Study of bovine mastitis in Asella government dairy farm of Oromia regional state, South eastern Ethiopia. International journal of current research and academic review, 1(2): 134-135.
2. CLSI. (2014): Performance standards for antimicrobial susceptibility testing.24th Informational Supplement. Clinical and Laboratory Standard Institute.
3. Duran N., Ozer B., Duran G.G., Yusuf O. and Demir C. (2012): Antibiotic resistance genes and susceptibility patterns in *Staphylococci*. Indian J Med Res, 135: 389-396.
4. Geidam Y.A, Zakaria Z., Aziz S.A., Bejo S.K., Abu, J. and Omar S. (2012): High prevalence of multidrug resistant bacteria in selected poultry farms in Selangor, Malaysia. Asian journal of animal and veterinary advances, 7:891-897.
5. Heba S., Mohamed K.F., Essam H.M and Soad A.N. (2014): Using integral system *staphyloccoci* kit for Biochemical Identification and Susceptiblity Testing of CNS isolated from broiler chickens in Egypt. Global veternaria., 13 (16): 1022-1028.
6. Jensen E.L. and Miller C.L. (2001): *Staphylococcus* Infections in Broiler Breeders. AviaTech, 1:1-4.
7. Koksal F., Yasar H. and Somasti M. (2007): Antibiotic resistance patterns of coagulase negative *staphylococcus* strains isolated from blood cultures of septicaemic patients in Turkey. Microbiological research. 164: 404-410.
8. Moon J. S., Lee A. R., Kang H. M., Lee E. S., Joo Y. S., Park Y. H., Kim M. N. and Koo H. C. (2007): Antibiogram and coagulase diversity in staphylococcal enterotoxin-producing *Staphylococcus aureus* from bovine mastitis. Journal of Dairy Science, 90(4):1716-1724.
9. Quinn, P.J., Carter, M.E., Markey, B.K. and Carter, G.R. (2002): Clinical veterinary microbiology (PP. 331-344). Harcourt publishers, Virginia, USA.
10. Suleiman A., Zaria L.T., Grema H.A. and Ahmadu, P. (2013): Antimicrobial resistant coagulase positive *Staphylococcus aureus* from chickens in Maiduguri, Nigeria. Sokoto Journal of Veterinary Sciences, 11(1): 51-55.

© 2016 Global Journals Inc. (US)

Global Journal of Science Frontier Research: D
Agriculture and Veterinary
Volume 16 Issue 2 Version 1.0 Year 2016
Type : Double Blind Peer Reviewed International Research Journal
Publisher: Global Journals Inc. (USA)
Online ISSN: 2249-4626 & Print ISSN: 0975-5896

Demonstration and Evaluation of Dual Purpose Chicken *"Potchefstroom Koekoek"* Packages at Areka areas, SNNPR, Ethiopia

By Aman Getiso, Melese Yilma, Mesfin Mekonnen, Addisu Jimma, Mebratu Asrat, Asrat Tera & Endrias Dako
Southern Agricultural Research Institute, Ethiopia

Abstract- The demonstration was conducted in Wolaita zone, Boloso Sore district at Areka and around Areka areas. Pparticipants (farmers) were selected purposively on the basis of willingness to construct poultry house; to cover all the associated package costs and record the required was selected. Survival of chicks during the first 8 weeks of brooding using hay-box at the farmers management condition was 79.8% (359 were survived out 450). On average about 93.1% of the chicken were survived to the laying age while mortality reduced from 20.2% to 6.9% . The average age at first egg laying recorded at each farmers was 142 days and average weight of eggs at first laying was 40.2g. The average weight of male and female chicken at 20 weeks of age was 1.5kg and 1.1kg respectively. Field day was arranged when they were at the age of 20 weeks and 135 (120 male and 15 female) farmers and 65 (60 male and 5 female) researchers, experts and government officials from regional to woredas levels were participated on field day and awareness creation was created as a result all participants got a conviction to consider the technology as a viable agricultural venture.

Keywords: potchefstroom koekoek, mortality, farmers management.

GJSFR-D Classification : FOR Code: 070799

DEMONSTRATIONANDEVALUATIONOFDUALPURPOSECHICKENPOTCHEFSTROOMKOEKOEKPACKAGESATAREKAAREASSNNPRETHIOPIA

Strictly as per the compliance and regulations of :

© 2016. Aman Getiso, Melese Yilma, Mesfin Mekonnen, Addisu Jimma, Mebratu Asrat, Asrat Tera & Endrias Dako. This is a research/review paper, distributed under the terms of the Creative Commons Attribution-Noncommercial 3.0 Unported License http://creativecommons.org/licenses/by-nc/3.0/), permitting all non commercial use, distribution, and reproduction in any medium, provided the original work is properly cited.

Demonstration and Evaluation of Dual Purpose Chicken *"Potchefstroom Koekoek"* Packages at Areka areas, SNNPR, Ethiopia

Aman Getiso [α], Melese Yilma [σ], Mesfin Mekonnen [ρ], Addisu Jimma [ω], Mebratu Asrat [¥], Asrat Tera [§] & Endrias Dako [χ]

Abstract- The demonstration was conducted in Wolaita zone, Boloso Sore district at Areka and around Areka areas. Pparticipants (farmers) were selected purposively on the basis of willingness to construct poultry house; to cover all the associated package costs and record the required was selected. Survival of chicks during the first 8 weeks of brooding using hay-box at the farmers management condition was 79.8% (359 were survived out 450). On average about 93.1% of the chicken were survived to the laying age while mortality reduced from 20.2% to 6.9% . The average age at first egg laying recorded at each farmers was 142 days and average weight of eggs at first laying was 40.2g. The average weight of male and female chicken at 20 weeks of age was 1.5kg and 1.1kg respectively. Field day was arranged when they were at the age of 20 weeks and 135 (120 male and 15 female) farmers and 65 (60 male and 5 female) researchers, experts and government officials from regional to woredas levels were participated on field day and awareness creation was created as a result all participants got a conviction to consider the technology as a viable agricultural venture.

Keywords: potchefstroom koekoek, mortality, farmers management.

I. Background and Justification

Animal production in general and chickens in particular play important socioeconomic roles many poor rural households in developing countries (Alders, 2004; Salam, 2005). Chicken are the most important avian species for the resource challenged families of the developing world, because they are sources of income, animal protein and have cultural values, and can be raised in varying agro climates with limited resources, feed and housing (Kondombo, 2005). As reported by Van Eekeren (2006), people rear chickens under widely varying circumstances, while their main objective is generally the same: maximum production from minimum costs and with minimum risks.

In sub Saharan Africa, 85% of all households keep chicken under free range system, with women owning 70% of it; providing cheap/affordable animal protein in the form of meat and eggs as well as being a reliable source of cash income (Aklilu *et al.,* 2007). Besides the sector significantly constitutes to human livelihood and food security of poor households and can be considered an initiative enterprise owing to its low cost (Abdelqader et. al, 2007).

In spite of their great importance to the lives of most rural people, the contribution of village chicken is not proportion to the huge number. According to Singh (1990), low productivity of local breeds; prevalence of diseases; less availability and poor quality of feeds; limited research and poor extension service; and lack of organized marketing and processing facilities are some of the most important constraints affecting the village chicken production system.

In Ethiopia chickens are the most widespread and almost every rural family owns chickens, which provide a valuable source of family protein and income (Tadelle, 2003). The total chicken population in the country is estimated to be 56.87 million (CSA, 2014). About 95.87% of the total population is consists of indigenous chickens characterized by the production of low yielding local chicken, a flock size of 5-6 per family and offering little or no additional inputs for housing, feeding and health care (Mebratu, 1997).

In Ethiopia, like other African countries, attempts have been made at various times by the Ministry of Agriculture and Rural Development (MOARD) and several other institutions including research, higher learning institutions and NGOs to improve village poultry production systems through introduction of exotic breeds and fertile eggs (Alemu and Tadelle 1997). Distribution of a day-old and 3 months old improved chicken breeds, mainly RIR & WLH, has been some of the livestock extension packages implemented by the ministry of agriculture. The package is being implemented in many ways like; 5 pullets & 1 cockerel, 1 cock only, 15 pullets & 2 cocks and 50 day-old chicks. Despite such a large number of improved breeds distribution into the village system, the majority of the chicken population is still comprised of the local stock managed under the traditional production system. The contribution of improved chicken in the current production system is less than two percent (Mebratu, 1997).

Author α σ ρω ¥ § χ: Southern Agricultural Research Institute, Areka Agricultural Research Center, P. O. Box 79, Areka, Ethiopia.
e-mail: aman.getiso@yahoo.com

© 2016 Global Journals Inc. (US)

A recent study on adoption of poultry breeds in the highlands of Ethiopia indicated that adoption has been limited by a set of factors such as, lack of strong extension follow up and complimentary inputs, diseases, unavailability of credit services and market problems. Besides, the numbers of breeds and birds included in the package were few (Hailemariam et al. 2006). This results to a huge gap between demand and supply of poultry products. According to Alemu and Tadelle (1997), the per capita egg and chicken meat consumption was estimated to be 57 eggs and 2.85 kgs respectively. But in the current time it is less than one egg and a kilogram of chicken meat, which is very much less than a global average (153 eggs) (Smith and Wiseman, 2007).

A recent study by Nigussie et al, (2010), witnessed that the significance of enhancing institutional links and the need to transform the traditional piece meal approach of poultry technology transfer into promotion of carefully selected and packaged technologies. Therefore, to tackle the ever existing problem, different approaches of improved poultry technology packages dissemination should be followed on the basis of certain socio-economic and physical environments.

a) Objectives of the study

i. *General Objective*

- To enhance a small scale commercial poultry production packages into potential areas so as to improve rural livelihood and nutrition quality of the people

ii. *Specific Objectives*

- To promote and disseminate suitable full-fledged poultry packages
- To build the skill of participant farmers thereby to increase farmer to farmer technology dissemination
- To aware the contribution of poultry technologies to household income and food security
- To increase the national per capita egg and poultry meat consumption

II. Methodology

The demonstration was conducted around Areka areas. Participants farmers was selected purposely on the basis of willingness construct poultry house; to cover all the associated package costs and record the required will be selected. Training was given poultry house and housing, health, feeding and data recording. Data was collected on mortality (as occurred due to either disease, predator, mechanical or others); age at first egg; cost of feed/feed ingredients and medicaments; income from sale of cocks, nonproductive/spent hens. Intensive follow up during the brooding phase, then on monthly base afterwards by the respective research centers. Monitoring and evaluation was undertaken by the team of experts from DZARC and respective research centers. Field day was arranged, so that stockholders and farmers in the respective areas will be included and participant farmers was presented their success and/or experience on the field day.

Accordingly, nine farmers around Areka areas were selected and 50 day-old koekoek chicken was given.

III. Result and Discussion

a) Mortality

Survival of chicks during the first 8 weeks of brooding using this modified hay-box at the farmers management condition was 79.8%. On average about 93.1% of the chicken survived to the laying age while mortality reduced from 20.2% to 6.9% (Table 1) . The survival rate and mortality varied between farmer could be duet difference in management from farmers to farmers. Even though difference in management observed mortality was due poor management (especially for high mortality in some farmers), inappropriate housing, watering and feeding condition. In addition to this the chicks were provided in cold season "*keremet*" so that the susceptibility of chicks was increased. These all showed, in future there need intense training and follow-up of poultry keepers.

Table 1 : Mortality Recorded at the age of their 4 months

Participants	No. of chicken given	Mortality recorded during first 8 weeks	Mortality recorded during 2nd 8 weeks
1	50	14	6
2	50	20	9
3	50	10	6
4	50	10	2
5	50	5	0
6	50	6	2
7	50	8	2
8	50	10	2
9	50	8	2

© 2016 Global Journals Inc. (US)

b) Age at first laying and average weight of eggs

The average age of first laying recorded at each farmers was 142 days and average weight of eggs at first laying was 40.2 g. Age at first laying and egg weight of Koekoek chicken was 153.3±6 days and 48.84± 6.77 g respectively in Ada"a and Lume districts (Desalew, 2012). The Koekoek breeds attain the first ovipostion at 130 days with an average egg weight of 55.7 g (Nithimo, 2004) in South Africa which is slightly early matured to first egg laying.

Table 1 : Age at first egg laying and weigh of eggs

Participants	No. of female chicken at first egg laying	Age at first egg laying (days)	Wt. of egg at first age (gm)
1	10	141	43.2
2	8	154	42.4
3	2	135	41.8
4	9	146	39
5	16	131	38.3
6	14	138	41
7	12	140	34.2
8	6	139	37.8
9	6	151	40
10	5	141	41.4
11	1	141	43.2

c) Weight of chicken recorded at the age of 20 weeks

The average weight at 20 weeks of age under farmers management condition was 1.5k and 1.1kg for male and females respectively (Table 3). Nthimo (2004) reported a body weight of 1.7kg for Koekoek breed at 26th week of age. Argaw and Mengistu (2011) also reported 1.39 kg of body weight at 19th weeks of age for Koekoek breeds at on station feeding trial at Haramaya University which is slightly consistent with the current evaluation at 20 weeks of age at farmers management condition. Benerjee et al. (2013) and Aberra et al. (2013) also reported 1.04kg and 1.01kg of body weight at 15 weeks of age respectively at Hawassa University intensive feeding. In general the body weight of koekoek breed achieved at 20 weeks of age evaluated under farmers management condition was showed good potential.

Table 3 : Body weight record of chicken (at 20 weeks of age)

Participants	No. of chicken sample taken		Average body weight (kg)	
	Male	Female	Male	Female
1	5	5	1.6	1.06
2	5	5	1.66	1.18
3	5	5	1.18	1.04
4	5	5	1.25	0.93
5	5	5	1.52	1.26
6	5	5	1.56	1.18
7	5	5	1.62	1.3
8	5	5	1.28	0.8
9	5	5	1.36	0.86
	Average		1.5	1.1

d) Profit earned by farmers

Even though, most of the farmers sold both male and female before all data were collected (such as egg production) cost of feed/feed ingredients; income from sale of cocks, nonproductive/spent hens were recorded, rough profit was estimated as indicated table (Table 4). All the costs was recorded based on the current price.

The change in net income (ΔNI) was calculated as the difference between the change in total return (ΔTR) and the change in total variable costs (TVC)

$$\Delta NI = \Delta TR - \Delta TVC$$

Accordingly the average net income from sales of chicken was 1048.90 (ET. Birr). This income was only from sales of males and females at the age of 4 months excluding egg production.

© 2016 Global Journals Inc. (US)

Table 4 : Estimated profit from sale of cocks, nonproductive/spent hens

Participants	List of costs				Income items			Total net income	Profit
	Unit	House construction	Chick purchase	Feed costs	Total Variable Cost	Sale of cock	Sale of hen		
1	birr	300	300	700	1300	1080	800	1880	580
2	"	1500	300	300	2100	990	1300	2290	190
3	"	695	300	1900	2895	1700	2040	3740	845
4	"	905	300	1550	2755	2000	1200	3200	445
5	"	2000	300	1500	3800	3240	1980	5220	1420
6	"	320	300	1060	1680	2400	1100	3500	1820
7	"	300	300	2500	3100	2000	1500	3500	400
8	"	0	300	150	450	1800	1560	3360	2910
9	"	500	300	200	1000	1020	810	1830	830
									1048.90

e) Field day arrangement

Field day was arranged when the chicken were at the age of 16 weeks so as to create awareness as time passes by and benefits realized, all participants got a conviction to consider the technology as a viable agricultural venture. Accordingly 135 (120 male and 15 female) farmers and 65 (60 male and 5 female) researchers, experts and government officials from regional to woredas levels were participated on field day. Farmers perception: generally farmers showed high interest to conduct poultry farming with some adjustments like: other highly productive breed and in-depth training on chicken management, house preparation and feed formation at home.

Fig. 1 : Photos taken during field day

© 2016 Global Journals Inc. (US)

IV. Challenges

There was a problem on farmers selection and data recording . As a result most of the farmers sold chicken (both male and female) before data on egg production, weight at 52 and 72 weeks of age were not organized.

V. Conclusion and Recommendations

The result of the current demonstration showed a good performance of *"Potchefstroom Koekoek"* under farmers management condition; indicating productivity could be increased through improved housing, feeding and health management. Farmers are aware that this breed can produce more if they are fed and looked after carefully, but majority of the farmers did not provide the recommended management practices. However, the overall productivity of the birds under farmers management condition was lower in comparison with those reared under intensive management system, but still the current demonstration suggested the importance of keeping such dual purpose chicken for farmers in the study areas. According to farmers perceptions and observations there was no doubt on breed adaptation.

In outlook of the above, training for farmers and extension staffs focusing on diseases control, improved housing and feeding should be arranged to be successful in such dual purpose chicken under farmer management production system.

Hence there were some indicating results (Mortality, Weight at 20 weeks of age, age at first egg laying) as compared to local chicken breeds scaling-up should be done in other areas with proper selection of farmers so that the missed data will also be included.

References Références Referencias

1. Abdelqader A, Wollny C and Gauly M (2007) Characterization of Local Chicken Production Systems and their Potential Under Different Levels of Management Practices in Jordan. Trop Anim Health Pro 39:155-164.
2. Aberra M., Yoseph G. and Kefyalew B., 2013. Effect of Feeding Graded Levels of Moringa stenopetala Leaf Meal on Carcass Traits and some Serum Biochemical Parameters of Koekoek Chickens. Agricultural development within the rural-urban continuum. University of Hohenheim, Inst. of Animal Nutrition, 70593 Stuttgart, Germany.
3. Aklilu H., Almekinders C. J. M., Van der Zijpp and A.J., 2007. Village poultry consumption and marketing in relation to gender, religious festivals and market access. Tropical Animal Health and Production 39, 165-168.
4. Alders R. 2004. *Poultry for profit and pleasure.* FAO Diversification Booklet 3. FAO (Food and Agriculture Organization of the United Nations), Rome, Italy.
5. Alemu, Y. and Tadelle, D. 1997. The status of poultry research and development in Ethiopia, research bulletin No.4, poultry commodity research program Debrezeit agricultural research center. Alemaya University of agriculture, Ethiopia. pp. 62.
6. Aregaw A. and Mengistu U., 2011. Body weight and dry matter intake of Horro, Koekoek and Lohmann silver chicken breeds under intensive management. Haramaya University 28th Annual Research and Extension Review Proceedings. March 2011.
7. Banerjee S, A Melesse, E Dotamo, K Berihun and M Beyan, 2013. Effect of feeding different dietary protein levels with Iso-Caloric ration on nutrients intake and growth performances of dual-purpose koekoeck chicken breeds. Int. J. Appl Poult. Res. 2(2): 27-32.
8. CSA (Central Statistical Agency). 2014. Agricultural sample survey Vol. II. Statistical Bulletin No. 505. CSA, Addis Ababa, Ethiopia.
9. Desalew Tadesse, 2012. Management practices, productive performances and egg quality traits of exotic chickens under village production system in east Shewa, Ethiopia. A thesis submitted to the school of Graduate Studies of Addis Ababa University, DEBRE ZEIT, ETHIOPIA.
10. Hailemariam Teklewold, Legesse Dadi, Alemu Yami, Negusse Dana, 2006. Adopting Poultry Breeds in the Highlands of Ethiopia. Ethiopian Institute of Agricultural Research (EIAR), Research Report 65. Addis Ababa, Ethiopia. *Http://www.Google www.fews.net/livelihoods*
11. Kondombo S.R. 2005. Improvement of village chicken production in a mixed (chicken– ram) farming system in Burkina Faso. PhD thesis. Wageningen Institute of Animal Sciences, Animal Nutrition Group, Wageningen University, The Netherlands. 208 pp.
12. Nigussie D, Van der Waaij LH, Dessie T, Van Arendonk JAM (2010). Production objectives and Trait preferences of village poultry producers of Ethiopia: implications for designing breeding schemes utilizing indigenous chicken genetic resources. Trop. Anim. Health Prod. 42:1519-529.
13. Nthimo, A.M., 2004. The phenotypic characterization of native Lesetho chickens. PhD thesis, university of the Free State, South Africa. 79p.
14. Salam, K.R., 2005. Improvement of village chicken production in a mixed (chicken-ram) farming system in Burkina Faso. Ph.D Thesis. Wageningen Institute of Animal Sciences, Animal Nutrition Group, Wageningen University, the Netherlands.
15. Tadelle Dessie. 2003. Phenotypic and genetic characterization of chicken ecotypes in Ethiopia. PhD Thesis. Humboldt University, Germany. 208 pp.
16. Van Eekeren N., A. Maas, H. W. Saatkamp and M. Verschuur. 2006. Small-scale chicken production. Agrodoc 4. Agromisa Foundation and CTA, Wageningen, The Netherlands.

© 2016 Global Journals Inc. (US)

This page is intentionally left blank

© 2016 Global Journals Inc. (US)

Global Journal of Science Frontier Research: D
Agriculture and Veterinary
Volume 16 Issue 2 Version 1.0 Year 2016
Type : Double Blind Peer Reviewed International Research Journal
Publisher: Global Journals Inc. (USA)
Online ISSN: 2249-4626 & Print ISSN: 0975-5896

Design and Development of a Microcontroller based Egg Incubator for Small Scale Poultry Production

By Rogelio B. Paguntalan & Vinyl Ho Oquino
Adama Science & Technology University, Ethiopia

Abstract- A study was conducted to design and develop a microcontroller baser egg incubator for small scale poultry production. The incubator was equipped with microcontrollers to control the egg turner, heater, and circulation fan. It was designed to operate at average temperature of 38C. The turner operates at 10 cycles per minute for 30 seconds every 6 hours while the circulation fan activates every hour for 30 seconds to circulate the air inside the incubator. The prototype incubator was tested by loading it with 20 pieces of chicken eggs from a breeding flock. It was found that the prototype incubator functioned as designed during the entire incubation period. Two eggs were hatched after 21 days of incubation and another egg was hatched on the 24th day of incubation period. The percent egg fertility was found to be 55% or 11/20 while the hatchability was only 27% or 3 out of 11 fertile eggs. The low hatchability of fertile eggs could be more likely attributed to frequent power outage of 2 to 6 hours a day during the entire incubation period. A stable and uninterrupted power supply is needed for the optimal hatching performance of the incubator.

Keywords: microcontroller, incubator, temperature sensor, relay driver, relay, heater and buzzer.

GJSFR-D Classification : FOR Code: 830309

DESIGNANDDEVELOPMENTOFAMICROCONTROLLERBASEDEGGINCUBATORFORSMALLSCALEPOULTRYPRODUCTION

Strictly as per the compliance and regulations of :

© 2016. Rogelio B. Paguntalan & Vinyl Ho Oquino. This is a research/review paper, distributed under the terms of the Creative Commons Attribution-Noncommercial 3.0 Unported License http://creativecommons.org/licenses/by-nc/3.0/), permitting all non commercial use, distribution, and reproduction in any medium, provided the original work is properly cited.

Design and Development of a Microcontroller based Egg Incubator for Small Scale Poultry Production

Rogelio B. Paguntalan [α] & Vinyl Ho Oquino [σ]

Abstract- A study was conducted to design and develop a microcontroller baser egg incubator for small scale poultry production. The incubator was equipped with microcontrollers to control the egg turner, heater, and circulation fan. It was designed to operate at average temperature of 38C. The turner operates at 10 cycles per minute for 30 seconds every 6 hours while the circulation fan activates every hour for 30 seconds to circulate the air inside the incubator. The prototype incubator was tested by loading it with 20 pieces of chicken eggs from a breeding flock. It was found that the prototype incubator functioned as designed during the entire incubation period. Two eggs were hatched after 21 days of incubation and another egg was hatched on the 24th day of incubation period. The percent egg fertility was found to be 55% or 11/20 while the hatchability was only 27% or 3 out of 11 fertile eggs. The low hatchability of fertile eggs could be more likely attributed to frequent power outage of 2 to 6 hours a day during the entire incubation period. A stable and uninterrupted power supply is needed for the optimal hatching performance of the incubator.

Keywords: microcontroller, incubator, temperature sensor, relay driver, relay, heater and buzzer.

I. Introduction

Poultry is an important part of Ethiopian diet. To date however, the supply of poultry products in the country is limited owing to low production potential of small poultry farmers. This is evidenced by the high cost of poultry products in the area such as dressed and processed chicken meat. The absence of local equipment like an incubator suitable for small scale poultry production in the countryside is one of the challenges facing the poultry industry.

In Ethiopia chickens are the most widespread and almost every rural family owns chickens, which provide a valuable source of family protein and income [1]. The country has diverse agro-climatic conditions that are favourable for the production of many different kinds of crops, providing a wide range of ingredients for feeds suitable for poultry and livestock. Making use of these resources to complement the scavenging resource base promises a considerable potential for success [2]. The total population of chicken in Ethiopia is about 50.38 million comprising cocks, cockerels, pullets, laying hens, non-laying hens and chicks of which 96.9%, 54% and 2.56% were reported to be indigenous, hybrid and exotic chicken breeds, respectively [8].

The agriculture sector employs 80-85% of the population and contributes 40% to the GDP [4]. Livestock production as a component of agriculture constitutes 40% of the agricultural output and contributed 13-16% of the total GDP [5, 6]. It was reported further that 99% of the total 56.5 million estimated chickens are contributed by village poultry production [7].

This study was aimed to design and develop an egg incubator appropriate for the socio-economic setting of the country, where small rural farmers cannot afford the costly imported equipment. With this locally available technology, it is expected that it would contribute much to the development of the poultry industry in developing countries and Ethiopia in particular and consequently to the alleviation of rural poverty. This research also supports the mission of the Science, Technology and Innovation Policy of Ethiopia "to create a technology transfer framework that enables the building of national capabilities in technological learning, adaptation and utilization through searching, selecting and importing effective foreign technologies in manufacturing and service providing enterprise" [3].

II. Materials & Methods

a) *Hardware and Software Components of Microcontroller Base Egg incubator*

The block diagram of the microcontroller base egg incubator is shown in figure 1. The microcontroller is the heart of the control circuit. The temperature sensor sends the actual temperature inside the incubator to microcontroller. The microcontroller turns on and turns off the heater on the required temperature. The heater driver and fan driver are used to interface the low voltage output coming from the microcontroller to high voltage as required by the heater. A DC motor is used to turn the eggs at specified time. The motor driver is connected to the microcontroller to control the turning of the eggs. The fan turns on and off as specified by the

Author α: Professor –Dept. of Agricultural Engineering, Adama Science & Technology University, Adama, Ethiopia,
e-mail: rbpcmu2003@gmail.com
Author σ: Assistant Professor –Dept. of Electrical & Computer, Engineering, Adama Science & Technology University, Adama, Ethiopia,
e-mail: vinylho1@gmail.com

© 2016 Global Journals Inc. (US)

microcontroller. The buzzer is used to make sound alarm when the incubation period is over.

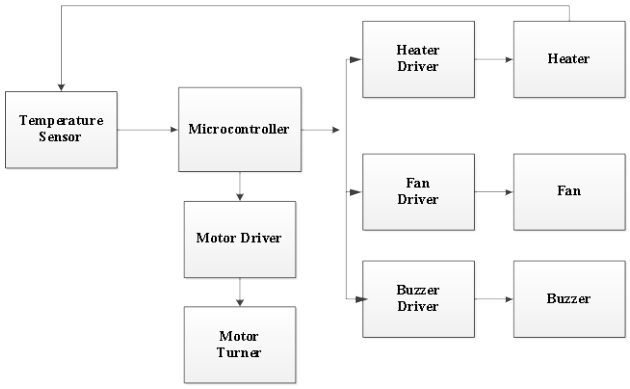

Figure 1 : Block diagram ofthe microcontroller base egg incubator

b) Temperature Sensor and Microcontroller

The LM35 temperature sensor was used in the circuit. A PIC16F877A was also used as the main controller of the system. The circuit of the temperature and microcontroller is shown in figure 2.

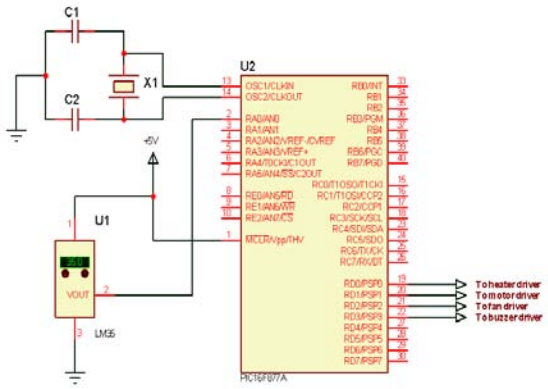

Figure 2 : The microcontroller and temperature sensor circuit

Based on the microchip recommendation from the manufacturer of PIC16F877A, a 4MHz crystal oscillator and a 22pF ceramic capacitor were used as the clock timing of the microcontroller. The Pin 2 of the LM35 temperature sensor was connected to analog input of PIC16F877A, while pin 1 and pin 3 were connected to +5V and ground of the power supply, respectively. The heater driver, motor driver, fan driver and the buzzer driver were connected to PORTD of the microcontroller as shown in figure 2. From the datasheet of LM35 temperature sensor, it can sense -55°C to 150°C with a linear scale factor of 10mV/°C. The egg incubator was set to operate at temperature range of 37°C to 38°C. The LM35 temperature sensor was used in this project.

c) Motor Driver and Motor Turner

A common emitter transistor configuration circuit was used as driver to the motor. The low speed 12V DC motor was used for automatic egg turner of the incubator. A 10 RPM angular speed of the motor was used so that the eggs will not be broken when the turner operates. The turner motor operates every 6 hours for 30 seconds. The time of the turner operation was tested by varying the time of operation of the turner motor using chicken eggs. The turner was set to activate every 6 hour for 30 seconds. This corresponds to the recommended turning frequency of four times a day for chicken eggs during incubation period.

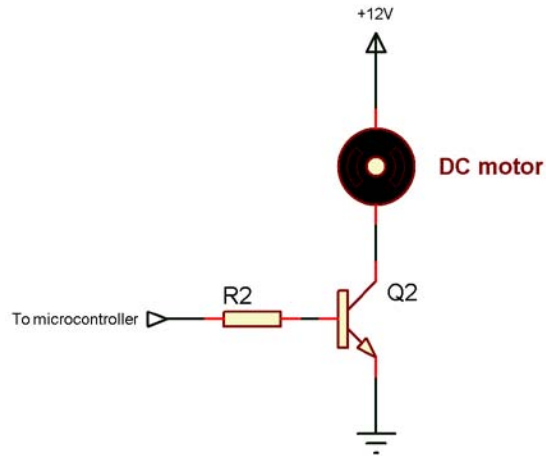

Figure 3 : The Turner Motor and Driver Circuit

The DC motor has a current rating of 1.5 amperes. The transistor needs a collector maximum current more than the load current which is the motor in this case. The 2N3055 NPN transistor was used in this circuit. From the datasheet, it has a 15 amperes collector maximum current rating. The value of resistor was computed as follows.

From the equation:

$$Ib = \frac{Ic}{\beta}$$

Where Ic is the current coming from the motor, $\beta = 100$ and Ib is the base current.

Thus;

$$Ib = 15 \text{ mA}$$

The current Ib was used to determine the value of the base resistor. Using Kirchhoff's voltage law the value of resistor;

$$R = 286.7\ \Omega$$

For actual resistance value, applying the safety factor of 80% was about 470 Ω. The resistor used in the actual circuit was about 500 Ω. The base resistor was directly connected to pin 20 of the microcontroller.

d) Fan Driver and Fan

A small DC computer fan was used in the incubator. And the small transistor driver was used to control the fan with the microcontroller. Figure 4 shows the circuit diagram of the fan driver and the fan.

© 2016 Global Journals Inc. (US)

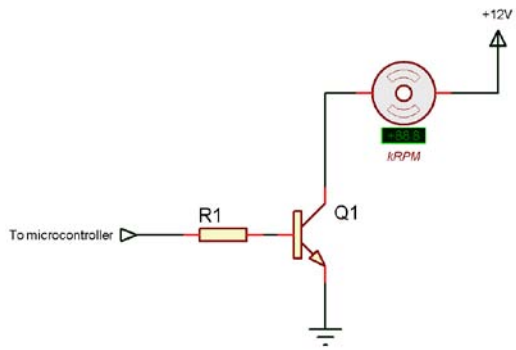

Figure 4 : The fan driver and fan circuit

The transistor used in the circuit was 9013 general purpose NPN transistor. The maximum collector current of this transistor was about 1000 mA. The fan maximum current was around 500 mA. The value of the resistor can be computed using the same procedure with the motor driver circuit. The resistor was directly connected to pin 21 of the microcontroller.

e) Buzzer Driver and Buzzer

A small 12volts DC buzzer was used to generate sound when the incubation period has elapsed. The buzzer driver and the buzzer connection are shown in figure 5.

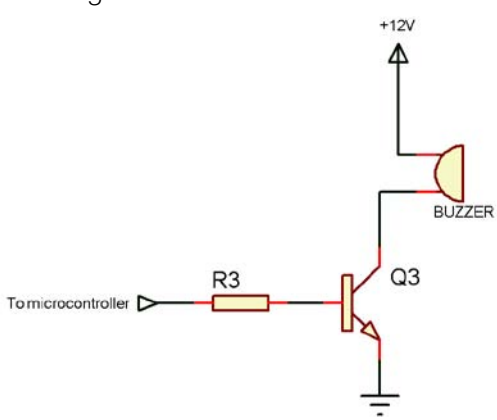

Figure 5 : The buzzer driver and buzzer circuit

The 9013 general purpose NPN transistor was used to drive the buzzer. The buzzer has a 150 mA current. The resistor value was computed in the same way with the motor driver circuit. The β of the transistor based on the 9013 datasheet was 100. The resistor was directly connected to pin 22 of the microcontroller.

f) Heater Driver

The heater driver circuit consists of a relay and transistor as shown in figure 6. The transistor base resistor was computed as follows.

From the equation,

$$Ib = \frac{Ic}{\beta}$$

Where:

Ic = Relay coil current flowing to the collector current

Applying Ohm's Law,

$$\text{Current of Relay Coil} = \frac{\text{Coil Voltage}}{\text{Coil Resistance}}$$

Based on the resistance test, the coil resistance was found out to be 100 ohms.

Thus, relaycoil current is equal to 120 mA and Ib = 1.2 mA

R4= 3.6 KΩ

The resistor was directly connected to pin 19 of the microcontroller. The diode connected to the relay coil serves as the flywheel diode. It protects the transistor during the turning off of transistor. The diode used in the circuit was 1N4004. This diode has a peak inverse voltage of 300 volts and the current rating of 1000 mA.

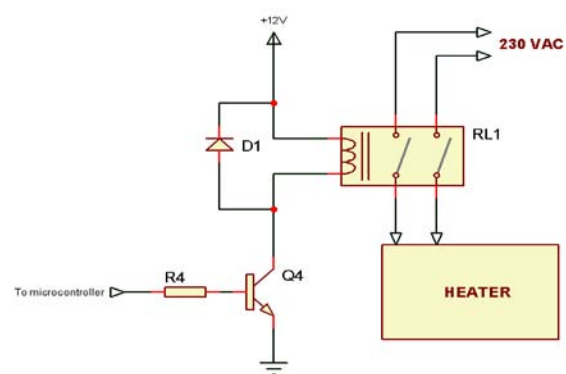

Figure 6 : The heater driver circuit

g) Heater

The heating system of the incubator plays an important role in maintaining the required temperature inside the incubator. The incubator operates from 37°C to 38°C. The incubator box produces conductive heat transfer from outside and inside environment. The conductive heat transfer was computed using the equation.

$$q = kAdt/s$$

where:

q = heat transfer
A = heat transfer area
k = thermal conductivity constant of the material
dt = Temperature gradient difference in the material
s = material thickness

The material used in this incubator has a thermal conductivity constant of 0.11 based from the experiment conducted by Oak Ridge National Laboratory.

The incubator box inside dimensions are shown in figure 7.

© 2016 Global Journals Inc. (US)

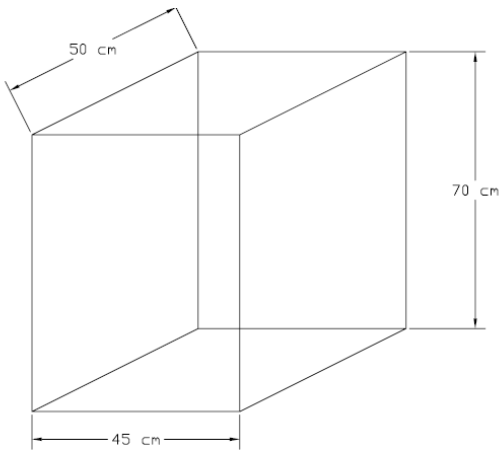

Figure 7 : The inside dimensions of incubator

Applying the heat conductive transfer equation, the heat transfer was found to be 200w for the total surface area in order to maintain the required temperature inside the incubator. The infiltration loss was assumed to be 30w. The incubator uses incandescent bulbs as heaters. According to the National Science Foundation, 90% of the total power of incandescent bulb turns into heat energy. To maintain an even distribution of heat inside the incubator, the incandescent bulbs were evenly distributed as shown in figure 8.

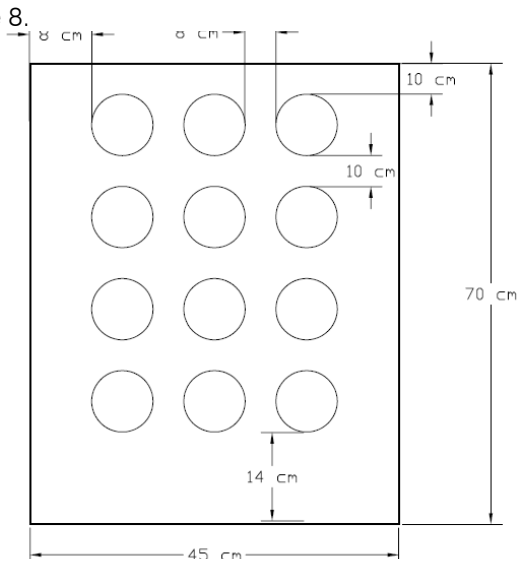

Figure 8 : The bulb arrangement at the right side of the box

The 10w incandescent bulbs were used in the incubator. The total number of 10w bulb used was 21 pieces since only 9w was converted to heat in order to achieve 200w of heat energy. The other 12 bulbs were placed in the side of the incubator, while the other 9 bulbs were placed at the top of the incubator. The distances of each bulb were evenly distributed.

h) Power Supply

The controller requires a 12 and 5 volts DC. The power supply circuit of the incubator is shown in figure 9. Based on the actual test of the total current of the controller circuit, it was found out to be 2.5 amperes. The transformer used in the circuit was a 3 amperes center tap with an output voltage of 12 volts.

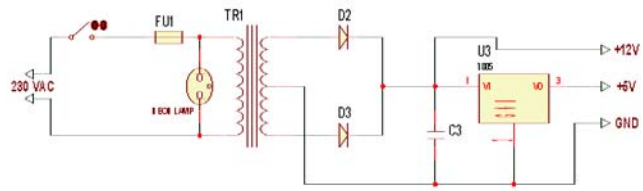

Figure 9 : The power supply circuit

The primary side of the transformer consists of a fuse and a switch. The neon lamp was used as power indicator of the power supply. The fuse in the primary side of the transformer was computed using the formula,

$$\text{Fuse Rating} = \frac{\text{Secondary Current}}{\text{Transformation Ratio}}$$

Where secondary current is the total current consumed by the controller and the driver circuit.

Thus;

Transformation ratio = 230 :12
Transformation ratio is equal to 19.
Computed Fuse Rating = 0.157 A

The actual value of fuse rating applying the safety factor is about 0.5 amperes.

The rectifier diode used in the circuit was 1N5404. It has a peak inverse voltage of 400 volts and a maximum current rating of 4 amperes. The filter capacitor was computed with a resulting value of 2200 uF for minimal ripple factor. The LM7805 regulator was used in the power supply. The regulator has a 5 volts output that was used to power-up the microcontroller circuit. The power supply has also a 12 volts output that can be used for motors, relay and buzzer.

i) Embedded Program

The microcontroller needs an embedded instruction in order to work at the specified required output. The flowchart of the system is shown in figure 10.

© 2016 Global Journals Inc. (US)

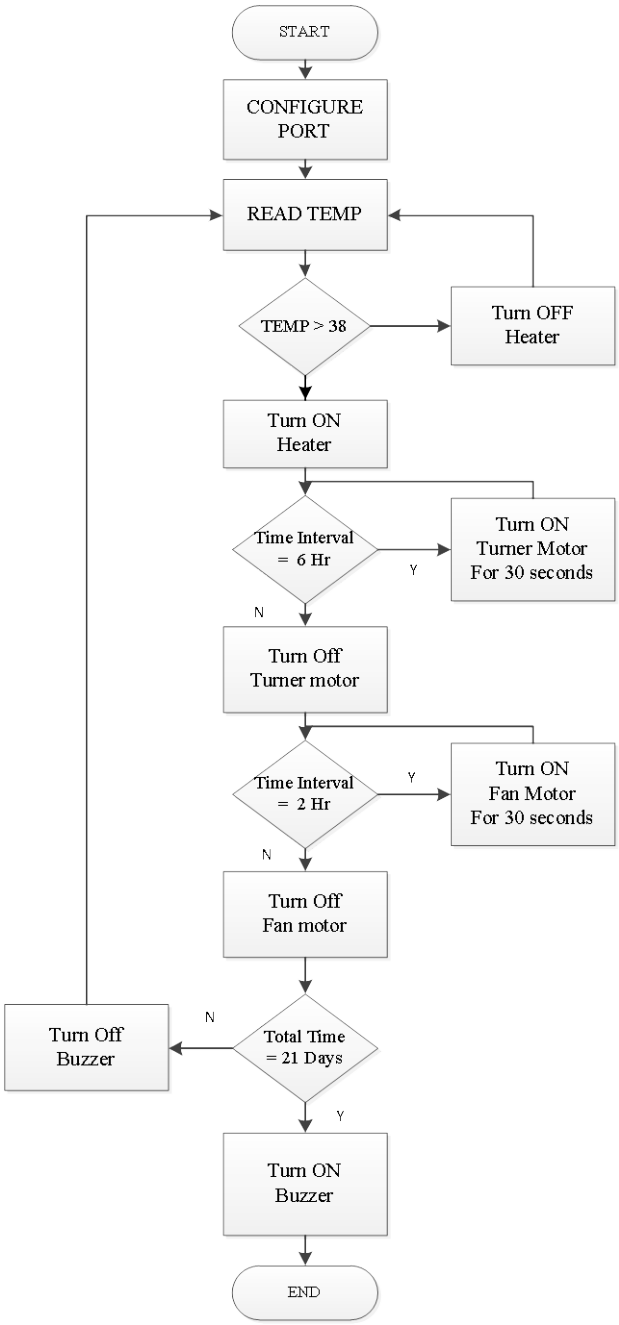

Figure 10 : The system flowchart

In figure 10, the different ports of microcontroller were initialized and configured based on the hardware connection. The sensor reads the temperature and sends it to the analog input of microcontroller. The microcontroller compares the temperature based on the requirement of egg incubator. If the temperature is greater than 38°C the heater will be turned off otherwise it is on. The microcontroller continues counting the time interval and total time accumulated. If the time interval is 1 hour, the fan will turn on for 30 seconds and turns off thereafter. If the time interval is about 6 hours the turner motor will turn on in order to rotate the egg for about 30 seconds. If the total accumulated time is 21 days equivalent the buzzer will generate a sound to remind that the incubation period has ended. The program was written in MikroC.

j) Performance Evaluation of the Prototype Egg Incubator

The prototype egg incubator in operation is shown in Figure 11. Performance evaluation of the egg incubator was made by loading the incubator with 20 pieces of chicken eggs which were purchased from one of the commercial poultry farms in Oromia region. The eggs came from a breeder flock and were assumed to be fertile eggs.

Before loading the eggs, the pan in the incubator was filled with tap water to maintain the required internal humidity for egg incubation to prevent them from drying up. Then the eggs were loaded on the tray before the power supply was turned on. Candling of eggs was done after seven days of incubation to identify the fertile from infertile eggs using an improvised candler. The power interruptions during the entire incubation period were also noted.

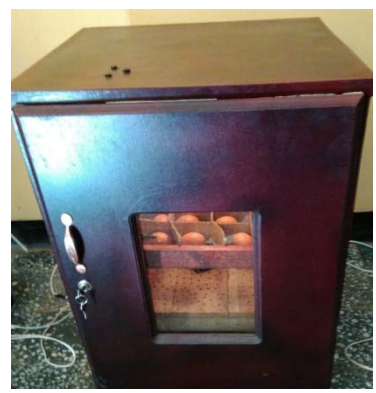

Figure 11 : The prototype microcontroller base egg incubator used in this study

III. Results and Discussion

a) Performance of the Prototype Egg Incubator

The prototype microcontroller base egg incubator was found to operate as designed. The turner automatically turns the eggs every 6 hours for 30 seconds or 4 times a day. The fan which is designed to circulate the air inside the incubator also performed as designed. The incubation temperature of 38°C was also achieved during the test. During the incubation period, the power supply interruptions of 2 to 6 hours per day occurred in the area.

b) Fertility and Hatchability

It was found that only 11 eggs out of 20 were fertile corresponding to 55% fertility. Of these 11 fertile eggs, only 3 were hatched after the incubation period of 24 days. Two eggs were hatched after 21 days of incubation (Figure 12) and one after 24 days. The percent hatchability therefore was only 3/11 or about 27%.

© 2016 Global Journals Inc. (US)

Figure 12 : Hatched eggs after 21 days of incubation

It has been reported that during power outage, embryos can survived at temperatures below 32°C for up to 18hours, and frequent power outage will delay hatching by a few days and decrease the hatchability to 40-50 percent [9]. The daily power interruptions of 2 to 6 hours a day during the incubation period could be the main reason for the low hatchability and delay in hatching of the eggs. Figure 13 shows the appearance of an embryo after 21 days of incubation period showing a delayed development because of frequent power outage in Adama area during the testing period.

Figure 13 : Appearance of under develop embryo after 21 days of incubation resulting from frequent power outage in the area

IV. Conclusion

The four factors of major importance in incubating eggs artificially includes temperature, humidity, ventilation and turning. Of these factors, temperature is the most critical. Extensive research has shown that the optimum poultry incubator temperature is (38°C) when relative humidity is 60 per cent. The prototype microcontroller base incubator is a forced-air incubator which has a built in fan to circulate the air that maintains humidity and temperature at constant level. Results revealed that the prototype microcontroller based incubator functioned according to the designed operating temperature, humidity, and frequency of turning the eggs during the performance test. A stable power supply is needed for the optimal hatching performance of the incubator.

References Références Referencias

1. Tadelle, D., Kijora, C. and Peters, K. (2003): Indigenous chicken ecotypes in Ethiopia: growth and feed utilization potentials. Int. J. of Poult. Sci., 2:144-152.
2. Dessie, T. and Ogle, B. (2001): Village poultry production system in the Centrale Highlands of Ethiopia. Trop. Anim. Health and Prod., 33:521-537.
3. Science and Technology Agenda of Federal Republic of Ethiopia. Addis Ababa.
4. Zinash, S., T. Aschalew, Y. Alemu and T. Azage, 2001. Status of live stock research and development in the highlands of Ethiopia. In: wheat and weeds: food and feed. proceedings of two stakeholder workshops. Wall, P.C. (Ed) CIMMYT, Mexico City, Mexico.
5. Abassa, K.P., 1995. Improving food security in Africa: The ignored contribution of livestock. Joint ECA/FAO agricultural division. monograph. No.14, Addis Ababa, Ethiopia.
6. Seifu, K., 2000. Opening address proceedings of the 8th annual conference of the Ethiopian Society of Animal Production (ESAP) held in Addis Ababa, Ethiopia.
7. Tadelle, D. and B. Ogle, 2001. Village poultry production system in the central high lands of Ethiopia. Tropical Animal health and production, 33: 521-537.
8. CSA (Central Statistical Authority), 2012. Statistical Report on Livestock and Livestock Characteristics (Private Peasant Holdings). Statistical Bulletin 570, Volume Ii, April 2013. Addis Ababa.
9. Phillip J. Clauer (2004). Incubating eggs. The Poultry Site. Online. http://www.thepoultrysite.com/articles/150/incubating-eggs/ (Accessed March 24, 2016).
10. Hatching Chickens. Incubating Eggs for Raising Baby Chickens. Online. http://www.small-farm-permaculture-and-sustainable-living.com/hatching_chickens.html. (Accessed March 24, 2016).

© 2016 Global Journals Inc. (US)

Global Journal of Science Frontier Research: D
Agriculture and Veterinary
Volume 16 Issue 2 Version 1.0 Year 2016
Type : Double Blind Peer Reviewed International Research Journal
Publisher: Global Journals Inc. (USA)
Online ISSN: 2249-4626 & Print ISSN: 0975-5896

Studies on the Medicinal Plant *Acalypha Wilkesiana* Ethanol Extract Phytocomponents by GCMS Analysis

By Igwe K. K., Madubuike A. J., Otuokere I. E., Chika Ikenga & Amaku F. J.
Michael Okpara University of Agric, Nigeria

Abstract- The ethanolic extract of the leaves of *Acalypha wilkesiana* plant was studied to find the phytochemical compounds using GCMS analysis. The result of the phytochemical analysis revealed the presence of 12 compounds. Among the 12 compounds, the most abundant were 2-Ethyl-1-hexene with 39.21 peak area %, RT 22.698 and molecular formula C_8H_{16} ; n-Haxadecanoic acid or plamitic acid with 20.92 peak area %, RT:20.92 and molecular formula $C_{16}H_{32}O_2$ and Butane 1,4-diol with 11.58%peak area RT:8.358 and molecular formula of $C_4H_{10}O_2$.which demonstrated various medicinal potentials. Therefore the ethanolic leaf extract of *Acalypha wilkesiana* contain pharmacologically useful active phytochemicals which have effect on progesterone receptors, glucocorticoid receptors, androgen and estrogen receptors with a mild antioxidant and atherosclerotic activity thus could play vital roles in health care programs.

Keywords: acalypha wilkesiana, acetophenone, GCMS, n-Hexadecanoic acid, progesterone receptor.

GJSFR-D Classification : FOR Code: 060799

STUDIESONTHEMEDICINALPLANTACALYPHAWILKESIANAETHANOLEXTRACTPHYTOCOMPONENTSBYGCMSANALYSIS

Strictly as per the compliance and regulations of :

© 2016. Igwe K. K., Madubuike A. J., Otuokere I. E., Chika Ikenga & Amaku F. J. This is a research/review paper, distributed under the terms of the Creative Commons Attribution-Noncommercial 3.0 Unported License http://creativecommons.org /licenses/by-nc/3.0/), permitting all non commercial use, distribution, and reproduction in any medium, provided the original work is properly cited.

Studies on the Medicinal Plant *Acalypha Wilkesiana* Ethanol Extract Phytocomponents by GCMS Analysis

Igwe K. K. [α], Madubuike A. J. [σ], Otuokere I. E. [ρ], Chika Ikenga [Ω] & Amaku F. J. [¥]

Abstract- The ethanolic extract of the leaves of *Acalypha wilkesiana* plant was studied to find the phytochemical compounds using GCMS analysis. The result of the phytochemical analysis revealed the presence of 12 compounds. Among the 12 compounds, the most abundant were 2-Ethyl-1-hexene with 39.21 peak area %, RT 22.698 and molecular formula C_8H_{16} ; n-Haxadecanoic acid or plamitic acid with 20.92 peak area %, RT:20.92 and molecular formula $C_{16}H_{32}O_2$ and Butane 1,4-diol with 11.58%peak area RT:8.358 and molecular formula of $C_4H_{10}O_2$.which demonstrated various medicinal potentials. Therefore the ethanolic leaf extract of *Acalypha wilkesiana* contain pharmacologically useful active phytochemicals which have effect on progesterone receptors, glucocorticoid receptors, androgen and estrogen receptors with a mild antioxidant and atherosclerotic activity thus could play vital roles in health care programs.

Keywords: acalypha wilkesiana, acetophenone, GCMS, n-Hexadecanoic acid, progesterone receptor.

I. Introduction

The extract of the herbs has been in use as the main approach to folk medical practitioners in the treatment of ailments and debilitating diseases. The claim that such herbs are efficacious against several ailments and diseases must be backed up by scientific proofs. Twenty five percent of people in the world depend on traditional medicinal plants as drugs for curing various diseases and ailments (1,2,3].Over 6000 plants in India are used in traditional, folk and herbal medicine representing about 75% of the medicinal needs of the developing countries [4]. The side effects associated with synthetic drugs continue to make researchers to look for natural remedies which are safe and effective [5,6]. Our research is therefore being directed towards elucidating potential sources of ethno-medicinal plants using modern scientific analysis like Gas Chromatography-Mass Spectrometry because developments in biotechnology have enhanced investigation of natural compounds faster with more precision than before, leading to isolation of bioactive compounds with health benefits. *Acalypha wikesiana* is one of those ethno medicinal plants with health benefits. *Acalypha wikesiana* is a plant (shrub) found worldwide mostly around the tropical of Africa, America and Asia. Its common names are copperleaf and Jecob's coat and it is one of the most widely known and utilized of the family Euphorbiacaece. The genus comprises about 570 species [7] with a layer proportion as needs while others are ornamental plants. The leaves measures 10 – 15cm and heart-shaped with combination of colours like green, purple, yellow, orange, pink or white depending on cultivation. *Acalypha wilkesiana* is an evergreen shrub usually planted around homes for horticultural purposes. The plant may grow up to 3meters high with erect stems and many branches. Previous scientific evaluation of *Acalypha wilkesiana* leaves revealed mycotic/antifungal activity [8] and some level of liver toxicity conducted after treatment for 28 days [9]. It looks its best when provided with regular watering during drought and will grow on a wide variety of garden soils, easily propagated by air, layers or cutting [10].

The leaves of *acalypha wilkesiana* are eaten as vegetables in the management of hypertension [11]. The expressed juice or boiled decoction is used for the treatment of gastrointestinal disorder and fungal infections. Aphids, mites and scales are pest and disease problems on *Acalypha wilkesana* plant [12].

[13] reported the presence of saponins, tannins, anthraquinone and glycoside in the leaves of *Acalypha wilkesiana.* It has antifugal and antibacterial properties [14,15,16,13]. [17] demonstrated that prolonged oral use of *Acalypha wilkesana* at high dose may be toxic.

This study is to identify the phytocompounds in ethanol extract of *Acalypha wilkesana* responsible for most of these folk claims.

II. Material and Methods

a) Plant Materials

Fresh leaves of *Acalypha wilkesiana* was harvested at Ohafia town in Abia State, Nigeria. The plant leaves were identified by Prof M C Dike at the Taxonomy section of College of Natural Resources and Environmental Management, Michael Okpara University of Agriculture, Umudike, Nigeria.

Author α σ: Departmemt of Veterinary Physiology, Pharmacology and Biochemistry, Michael Okpara University of Agriculture, Umudike, Nigeria. e-mail: kkigwe191@gmail.com
Author ρ: Departmemt of Chemistry, Michael Okpara University of Agriculture, Umudike, Nigeria.
Author Ω: Recare Natural Products, Lagos, Nigeria
Author ¥: Physical Chemistry Research Lab, University of KwaZulu, Natal, Durban, South Africa.

© 2016 Global Journals Inc. (US)

b) Preparation of Plant Extract

The plant material of *Acalypha wilkesiana* was collected from wild, shade dried for 10 days and pulverized to powder using mechanical grinder. The plant extract was prepared using Soxhlet method described by [18]. Thirty five grams (35 g) of powdered sample was introduced into the extraction chamber of the Soxhlet extractor using methanol as solvent. Temperature was maintained at 70° C throughout the extraction period of 48 hrs. At the end of the extraction period, the extract was concentrated using oven at 35° C to obtain dried extract which was sent for GCMS analysis.

c) GCMS analysis of Acalypha wilkesiana

The characterization of the Phytochemicals in *Acalypha wilkesiana* was done using GC-MS QP2010 Plus (Shimadzu, Japan). The identification of the phytochemicals in the sample was carried out using a QP2010 gas chromatography with Thermal Desorption System, TD 20 coupled with Mass Spectroscopy (Shimadzu). The ionization voltage was 70eV. Gas Chromatography was conducted in the temperature programming mode with a Restek column (0.25 mm, 60 m, XTI-5).The initial column temperature was 80°C for 1min, and then increased linearly at 70°C min^{-1} to 220°C, held for 3 min followed by linear increased temperature 10°C min^{-1} to 290°C for 10 min. The temperature of the injection port was 290°C and the GC-MS interface was maintained at 290°C .The sample was introduced via an all-glass injector working in the split mode, with helium carrier gas low rate of 1.2 ml min^{-1}. The identification of compounds was accomplished by comparison of retention time and fragmentation pattern, as well as with mass spectra of the GC-MS.

d) Identification of Phytocompoments in Acalypha wilkesiana

GC-MS Chromatogram of *Acalypha wilkesiana* revealed twelve peaks showing that twelve different compounds were present. Identity of the active components in the extract was done by comparison of their retention indices, peak area percentage and mass spectra fragmentation pattern with those stored in the database of National Institute of Standards and Technology (NIST) and also with published literature, NIST08.LIB [19], WILEY8.LIB [20], PESTEI-3.LIB and FA-ME.LIB library sources were used for matching the identified components from the plant material. The name, molecular weight, formula, structure and bioactivities of the compounds were ascertained.

III. Results and Discussion

a) Results

GCMS chromatogram of the ethanolic extract of *Acalypha wilkesiana* (Figure 1) showed twelve peaks which indicated the presence of twelve phytochemicals constituents.The mass spectra data of *Acalypha wilkesiana* is show in figure 2. The retention time (RT), peak area percentage, molecular weight, molecular formula and bioactivities of *Acalypha wilkesiana* is shown in table 1.

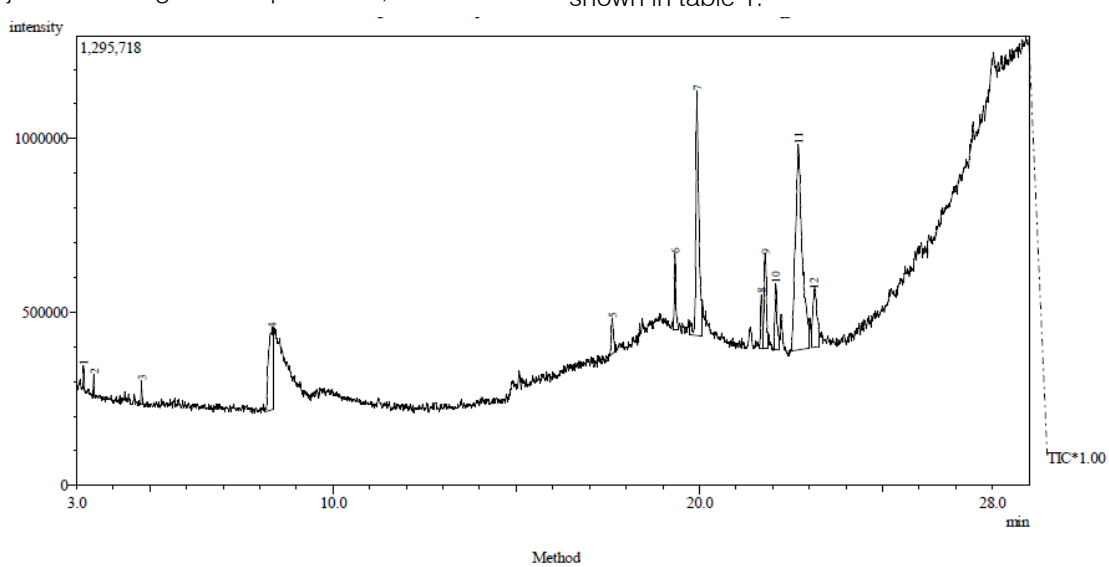

Figure 1 : Shows the chromatogram of *Acalypha wilkesiana*

© 2016 Global Journals Inc. (US)

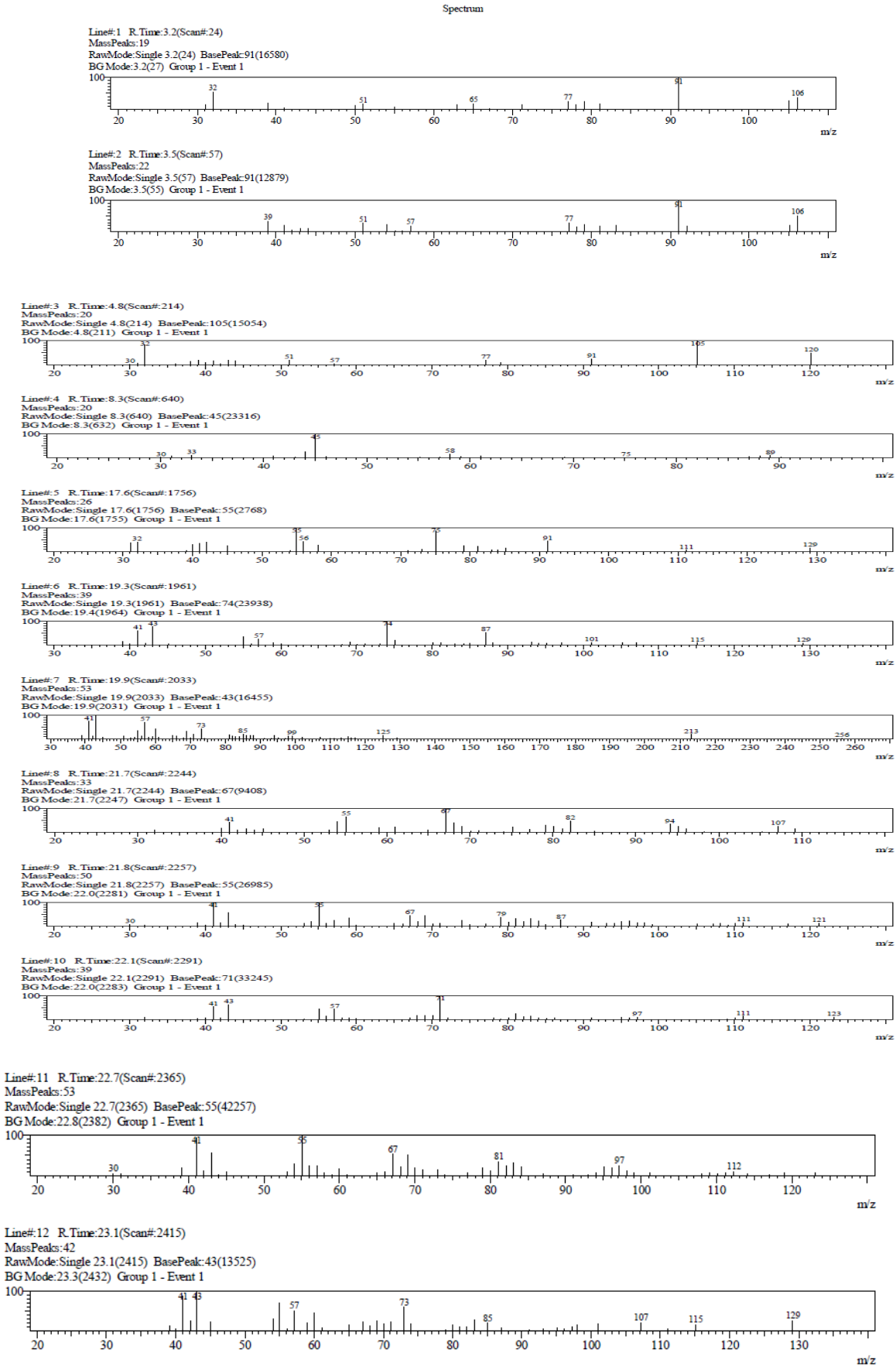

Figure 2 : Shows the mass spectra of the twelve phytocompounds identified by GCMS analysis

© 2016 Global Journals Inc. (US)

Table 1 : Shows the names, retention time, peak area percentage, molecular weight, molecular formula and bioactivity of compounds identified in *Acalypha wilkesiana* by GCMS analysis.

S.No	Name of Compound	Retention time	Peak area %	Molecular weight	Molecular formular	Molecular structure	Bioactivity
1	3-Methylene-1-vinyl-1-cyclopentene	3.193	0.58	106.16	C_8H_{10}	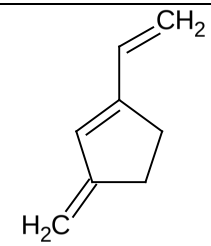	Progesterone receptor
2	2-Vinylbicyclo[2.1.1]hex-2-ene	3.469	0.47	106.16	C_8H_{10}	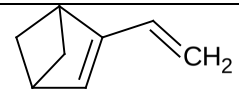	Progesterone receptor
3	Acetophenone or Methyl phenyl ketone	4.771	0.63	120.14	C_8H_8O	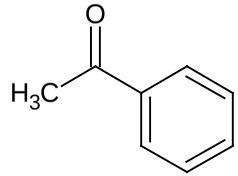	Hypnotic and anticonvulsant under brand name Hypnone.
4	Butane-1,4-diol	8.358	11.53	90.12	$C_4H_{10}O_2$	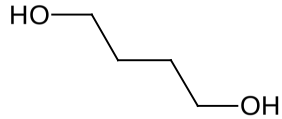	Nausea, vomiting, dizziness, sedation, vertigo, and potentially death if ingested in large amounts
5	3-Methyl-6-hepten-1-ol	17.622	2.32	128.21	$C_8H_{16}O$	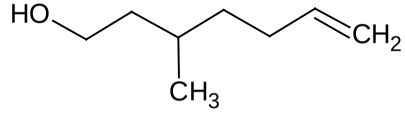	Glucocorticoid receptor
6	Acrylic acid butyl ester	19.331	3.46	128.16	$C_7H_{12}O_2$	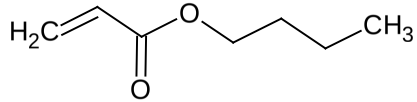	Unknown
7	n-Hexadecanoic acid or Palmitic acid	19.935	20.92	256.42	$C_{16}H_{32}O_2$	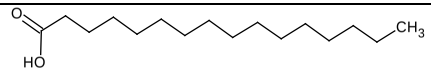	Mild antioxidant and anti-atherosclerotic activity [21]
8	1,4-Dimethylbenzene or 1,4-Xylene	21.692	3.03	106.16	C_8H_{10}	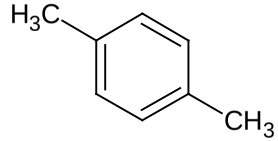	Inhaling *p*-xylene can cause dizziness, headache, drowsiness, and nausea. dry skin and redness

© 2016 Global Journals Inc. (US)

9	Styryl alcohol	21.794	5.97	120.14	C_8H_8O	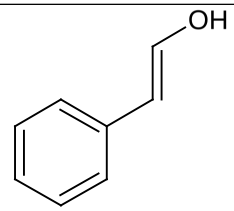	Estrogen receptor; agonist
10	Phenylethyl alcohol	22.085	4.45	122.16	$C_8H_{10}O$	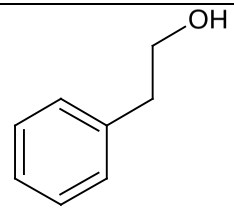	Antiinfective agent and disinfectant
11	2-Ethyl-1-hexene	22.698	39.21	112.21	C_8H_{16}	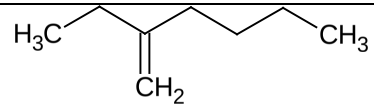	Androgen receptor, estrogen receptor agonist
12	2-Butenyl propionate	23.146	7.41	128.16	$C_7H_{12}O_2$	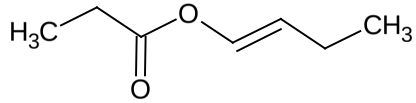	ACE, angiotensin-converting enzyme,

Bioactivity source: www.chemspider.com

© 2016 Global Journals Inc. (US)

IV. Discussion

The chromatogram of *Acalypha wilkesiana* leaf indicated the presence of 12 phytocomponents. These compounds were 3-methylene-1-vingl-1-cyclopentene which at retention time of 3.193 had a peak are percentage of 0.58% and 2-Vinylbicyclo (2.1.1) hex – 2 – ene which at retention time of 3.459 had a peak area percentage of 0.47% had effect on progesterone receptor. The local effects of progesterone on reproductive organs include the glandular development of the lobular and alveolar tissue of the breast and the cyclic glandular development of the endometrium [22, 23, 24] therefore this plant could be beneficial in the management of pregnancy related cases especially to synchronize estrus.

The compound acetophenone with retention time 4.771 and peak area percentage of 0.63 was found to possess hypnotic and anticonvulsant effect. This compound could be used to induce sleep (hypnosin) or to immobilize reflex as a preanaethetic agent in treatments or surgery. It could also be used to inhibit convulsions acting as a sedative by depressing the central nervous system. Other compounds Butane-1, 4-diol with retention time of 8.358 with peak area percentage of 11.33% and 1, 4 – Dimethyl benzene with retention time of 21.692 and peak area percentage of 3.03 also showed abilities of causing dizziness and sedation thus can act synergistically to potentiate the activity of acetophenone. Acetophenazine, acetophenetidin, and acetophenone group of drugs are known to have a tranquilizing effect [25].

These compounds should be used with caution, because at high doses they could bring side effects like Nausea, vomiting, dizziness, vertigo, headache dry skin and redness and even death [17].

The compound 3- methyl – 6 – hepten – 1 – ol with retention time of 17.622 with peak area percentage of 2.32% had effect on glucocorticoid receptors which could be used to moderate the use of glucose by the cells. [26] in their work agreed that Glucocrticoid hormones stimulate gluconeogenesis by the liver, sometimes producing 6 to 10 fold increase in hepatic glucose production thus being critical to survival during periods of fasting and starvation. [24].

The compound n-Hexadecanoic acid or palmitic acid with retention time 19.935 and peak area percentage of 20.92% had mild antioxidant and anti-atherosclerotic activity [21].

The compound styryl alcohol with retention time 21.794 and peak area percentage of 5.97% had estrogen receptor against activity because of the presence of the benzene ring which could bind alpha or beta estrogen receptor [27].

Also the compound 2-Ethyl – l-hexene with retention time of 22.698 and peak area percentage of 39.21% which was the most abundant compound in the sample had androgen receptor and estrogen receptor agonist activities.

V. Conclusion

From the GCMS analysis of *Acalypha wilkesiana*, we can conclude that the activities of the extract were hormonal in nature. The influence of the extract was mostly targeted towards steroid hormones as seen in Table 1. From the above analysis *Acalypha wilkesiana* ethanolic extract could have some tranquilizing and antioxidant activity because of the presence of acetophenone and n-Hexadecanoic acid. The plant extract could also be useful in controlling rennin-dependant hypertension due to the presence of phytochemical, 2-Butenyl propionate identified by GCMS. *Acalypha wilkesiana* should be used with caution because high dose could be toxic as demonstrated by [17].

VI. Acknowledgement

We appreciate with thanks the research supports from EUNISELL and RECARE natural products.

References Références Referencias

1. Reddy, K.J 2004. Medicinal Plant Research Scenario in India. *Info concepts India Inc.* pp.25-28.
2. Kumara, P., Otaghvari, A.M., Govindapyari, H., Bahuguna, Y.M., Uniyal, P.L 2011. Some Ethno-Medicinally Important Pteriodphytes of India. *India. International Journal of Medicinal Aromatic plants,* 1(1): 18-22.
3. Sharma, J., Painuli, R. M. 2011. Plants used for the treatment of Rheumatism by the Bhoxa tribe of District Dehradun, Uttarakhand, India. *International Journal of Medicinal Aromatic Plants,* 1(1)28-32.
4. Rajshekharan, P.E. 2002. Herbal Medicine, In: World of Science, *Employment News*. Pp.3.
5. Gijtenbeek, J.M.M., Vanden Bent, M.J., Vecht, C.J 1999. Cyclosporine neurotoxicity. *Journal of Neurology*, 246: 339-346.
6. Johnson, W.C., William, O.W. 2002. Warfarin toxicity. *Journal of Vascular Surgery*, 35: 413-421.
7. Riley, H.P (1963) Families of Flowering Plants of Southern Africa, *University of Kenturky Press*, USA, Pg. 73.
8. Oyelami, O. A., Onayemi, O., Oladimeji, A., Onawunmi, O. (2003). Clinical Evaluation of *Acalypha* Ointment in the Treatment of Superficial Fungal Skin Diseases. *Phytotherapy Research*, 17: 555-5.
9. Olukunle, J.O., Jacobs, E.B., Ajayi, O.K., Biobaku, K.T., Abatan, M.O (2014). Toxicological Evaluation of the Aqueous Extract of *Acalypha wilkesiana* in Wistar albino rats. *Journal of Complementary and Integrative Medicine,* Vol.8.

© 2016 Global Journals Inc. (US)

10. Edward G.F. (2011) Environmental Horticulture, Department, co-operative Extension Services, Institute of Food and Agricultural Sci. (IFAS) University of Florida, Gainesville, 32611.
11. 3. Ikewuchi J, Chigozie A, Amaka U, Erhieyovwe Y and Okuingbowa SO. Effects of *Acalypha wilkesiana* Muel Arg on Plasma sodium and potassium concentration of normal rabbits. *Pakistan, J Nutri* 2008:7 (1): 130-132.
12. Edward F. Gilman (2014) A series of the Environmental Horticulture UF/IFAS Extension. FPS 6 Document.
13. Oladunmoye, M.K. 2006. Comparative Evaluation of Antimicrobial Activities and Phytochemical Screening of Two Varieties of *Acalypha wilkesiana. Int. J. Trop. Med, 1(3); 134-136.*
14. Akinde, B.E (1986). Phytochemical and Microbiological Evaluation of the Oil from the Leaves of *Acalypha wilkesiana*. In Safowora A. editor. The State Medicinal Plant Resaerch in Nigeria. University of Ibadan Press, Nigeria. Pg. 362 – 363.
15. Adesina, S.K., O. Idowu A.O. Ogudaini, H. Onawunmi and M. Pais, (2000). Antimicrobialk constituents of the leaves of *Acalypha wilkesiana* ans *Acalypha hispida*. *Phytotherapy Res*, 14:Pp 371 – 374.
16. Ogundaini A. O. 2005. From Greens into Medicine: Taking a Lead from Nature. An Inaugural Lecture Delivered at Oduduwa Hall, Obafemi Awolowo University, Ile-Ife, Nigeria. Inaugural Lecture Series 176, OAU Press limited, Ile-Ife, Nigeria, pp 12-15.
17. 1. Hanna Alim Madziga, Umar Kyari Sani Saka and Ayi Vandi Kwaghe (2013) effect of aqueous leaf extract of *Acalypha wilkesiana* Muell-Arg (Jacob's Coper Leaf) leaves on leucocytes count (Wbc) in mice after subacute administration. *Report and opinion*; Vol: 5(8). http:/www.scincepub.net/repoort
18. Jensen W.B, (2007) The origin of Soxhlex Extraction. *Journal Clinical Education. 84* (12), 1913-1914.
19. Stein S. E., National Institute of Standards and Technology (NIST) Mass Spectral Database and Software, Version 3.02, USA. (1990).
20. Mc Lafferty F. W., Registry of mass spectral data. *Fourth electronic ed. Wiley New York* (1986).
21. Cho K.H (2015). Monoacylglycerol oleic acid has stronger antioxidant, anti-atherosclerotic and protein glycation inhibitory activities than MAG-palmitic acid. Journal of medicinal food, 13(1): 99 – 107.
22. Revelli A., Massobrio M., Tesarik J. (1998) Nongenomic Actions of Steroid Hormones in Reproductive Tissue. *Endocrine Review* 19, 3-17.
23. American Society of Reproductive Medicine Practice Committee (2006) American society for Reproductive medicine practice committee opinion on estrogen and progesterone therapy in post menopausal women. *Fertility and Sterility* 86 (Suppl 4), 575-588.
24. North American Menopause society. (2004). Recommendations for estrogen and progesterone use in peri-and post menopausal women: Position Statement of the North American Menopause Society. Menopause 11, 589 – 600.
25. V.P. Studdert., C. C. Gay.,D. C. blood (2012) Saunders comprehensive Veterinary Dictionary 4th Edition.Pg.9.
26. Carol Mattson Porth and Glenn Matfin (2009) Pathophysiology concepts of Altered Health State. Eight Ed. Pg.1053.
27. Igwe, K. K. Ijeh, I.I., Okafor, P. N. (2015) Action of Contractile at Fraction of *Vernonia amygdalina*. Del ethanolic extract on Hormonal Profile of Estrogen and Progesterone in female albino Wistar Rats. *Global Reserch Journal of Science and Nature*. Vol. 1 (2) pp 1-5.

© 2016 Global Journals Inc. (US)

Global Journals Inc. (US) Guidelines Handbook 2016

www.GlobalJournals.org

FELLOWS

FELLOW OF ASSOCIATION OF RESEARCH SOCIETY IN SCIENCE (FARSS)

Global Journals Incorporate (USA) is accredited by Open Association of Research Society (OARS), U.S.A and in turn, awards "FARSS" title to individuals. The 'FARSS' title is accorded to a selected professional after the approval of the Editor-in-Chief/Editorial Board Members/Dean.

- The "FARSS" is a dignified title which is accorded to a person's name viz. Dr. John E. Hall, Ph.D., FARSS or William Walldroff, M.S., FARSS.

FARSS accrediting is an honor. It authenticates your research activities. After recognition as FARSB, you can add 'FARSS' title with your name as you use this recognition as additional suffix to your status. This will definitely enhance and add more value and repute to your name. You may use it on your professional Counseling Materials such as CV, Resume, and Visiting Card etc.

The following benefits can be availed by you only for next three years from the date of certification:

FARSS designated members are entitled to avail a 40% discount while publishing their research papers (of a single author) with Global Journals Incorporation (USA), if the same is accepted by Editorial Board/Peer Reviewers. If you are a main author or co-author in case of multiple authors, you will be entitled to avail discount of 10%.

Once FARSB title is accorded, the Fellow is authorized to organize a symposium/seminar/conference on behalf of Global Journal Incorporation (USA). The Fellow can also participate in conference/seminar/symposium organized by another institution as representative of Global Journal. In both the cases, it is mandatory for him to discuss with us and obtain our consent.

You may join as member of the Editorial Board of Global Journals Incorporation (USA) after successful completion of three years as Fellow and as Peer Reviewer. In addition, it is also desirable that you should organize seminar/symposium/conference at least once.

We shall provide you intimation regarding launching of e-version of journal of your stream time to time.This may be utilized in your library for the enrichment of knowledge of your students as well as it can also be helpful for the concerned faculty members.

The FARSS can go through standards of OARS. You can also play vital role if you have any suggestions so that proper amendment can take place to improve the same for the benefit of entire research community.

As FARSS, you will be given a renowned, secure and free professional email address with 100 GB of space e.g. johnhall@globaljournals.org. This will include Webmail, Spam Assassin, Email Forwarders,Auto-Responders, Email Delivery Route tracing, etc.

The FARSS will be eligible for a free application of standardization of their researches. Standardization of research will be subject to acceptability within stipulated norms as the next step after publishing in a journal. We shall depute a team of specialized research professionals who will render their services for elevating your researches to next higher level, which is worldwide open standardization.

The FARSS member can apply for grading and certification of standards of their educational and Institutional Degrees to Open Association of Research, Society U.S.A. Once you are designated as FARSS, you may send us a scanned copy of all of your credentials. OARS will verify, grade and certify them. This will be based on your academic records, quality of research papers published by you, and some more criteria. After certification of all your credentials by OARS, they will be published on your Fellow Profile link on website https://associationofresearch.org which will be helpful to upgrade the dignity.

The FARSS members can avail the benefits of free research podcasting in Global Research Radio with their research documents. After publishing the work, (including published elsewhere worldwide with proper authorization) you can upload your research paper with your recorded voice or you can utilize chargeable services of our professional RJs to record your paper in their voice on request.

The FARSS member also entitled to get the benefits of free research podcasting of their research documents through video clips. We can also streamline your conference videos and display your slides/ online slides and online research video clips at reasonable charges, on request.

© Copyright by Global Journals Inc.(US)| Guidelines Handbook

The FARSS is eligible to earn from sales proceeds of his/her researches/reference/review Books or literature, while publishing with Global Journals. The FARSS can decide whether he/she would like to publish his/her research in a closed manner. In this case, whenever readers purchase that individual research paper for reading, maximum 60% of its profit earned as royalty by Global Journals, will be credited to his/her bank account. The entire entitled amount will be credited to his/her bank account exceeding limit of minimum fixed balance. There is no minimum time limit for collection. The FARSS member can decide its price and we can help in making the right decision.

The FARSS member is eligible to join as a paid peer reviewer at Global Journals Incorporation (USA) and can get remuneration of 15% of author fees, taken from the author of a respective paper. After reviewing 5 or more papers you can request to transfer the amount to your bank account.

MEMBER OF ASSOCIATION OF RESEARCH SOCIETY IN SCIENCE (MARSS)

The ' MARSS ' title is accorded to a selected professional after the approval of the Editor-in-Chief / Editorial Board Members/Dean.

The “MARSS” is a dignified ornament which is accorded to a person’s name viz. Dr. John E. Hall, Ph.D., MARSS or William Walldroff, M.S., MARSS.

MARSS accrediting is an honor. It authenticates your research activities. After becoming MARSS, you can add 'MARSS' title with your name as you use this recognition as additional suffix to your status. This will definitely enhance and add more value and repute to your name. You may use it on your professional Counseling Materials such as CV, Resume, Visiting Card and Name Plate etc.

The following benefitscan be availed by you only for next three years from the date of certification.

MARSS designated members are entitled to avail a 25% discount while publishing their research papers (of a single author) in Global Journals Inc., if the same is accepted by our Editorial Board and Peer Reviewers. If you are a main author or co-author of a group of authors, you will get discount of 10%.

As MARSS, you will be given a renowned, secure and free professional email address with 30 GB of space e.g. johnhall@globaljournals.org. This will include Webmail, Spam Assassin, Email Forwarders,Auto-Responders, Email Delivery Route tracing, etc.

We shall provide you intimation regarding launching of e-version of journal of your stream time to time.This may be utilized in your library for the enrichment of knowledge of your students as well as it can also be helpful for the concerned faculty members.

The MARSS member can apply for approval, grading and certification of standards of their educational and Institutional Degrees to Open Association of Research, Society U.S.A.

Once you are designated as MARSS, you may send us a scanned copy of all of your credentials. OARS will verify, grade and certify them. This will be based on your academic records, quality of research papers published by you, and some more criteria.

It is mandatory to read all terms and conditions carefully.

Auxiliary Memberships

Institutional Fellow of Global Journals Incorporation (USA)-OARS (USA)

Global Journals Incorporation (USA) is accredited by Open Association of Research Society, U.S.A (OARS) and in turn, affiliates research institutions as "Institutional Fellow of Open Association of Research Society" (IFOARS).

The "FARSC" is a dignified title which is accorded to a person's name viz. Dr. John E. Hall, Ph.D., FARSC or William Walldroff, M.S., FARSC.

The IFOARS institution is entitled to form a Board comprised of one Chairperson and three to five board members preferably from different streams. The Board will be recognized as "Institutional Board of Open Association of Research Society"-(IBOARS).

The Institute will be entitled to following benefits:

The IBOARS can initially review research papers of their institute and recommend them to publish with respective journal of Global Journals. It can also review the papers of other institutions after obtaining our consent. The second review will be done by peer reviewer of Global Journals Incorporation (USA) The Board is at liberty to appoint a peer reviewer with the approval of chairperson after consulting us.

The author fees of such paper may be waived off up to 40%.

The Global Journals Incorporation (USA) at its discretion can also refer double blind peer reviewed paper at their end to the board for the verification and to get recommendation for final stage of acceptance of publication.

The IBOARS can organize symposium/seminar/conference in their country on behalf of Global Journals Incorporation (USA)-OARS (USA). The terms and conditions can be discussed separately.

The Board can also play vital role by exploring and giving valuable suggestions regarding the Standards of "Open Association of Research Society, U.S.A (OARS)" so that proper amendment can take place for the benefit of entire research community. We shall provide details of particular standard only on receipt of request from the Board.

The board members can also join us as Individual Fellow with 40% discount on total fees applicable to Individual Fellow. They will be entitled to avail all the benefits as declared. Please visit Individual Fellow-sub menu of GlobalJournals.org to have more relevant details.

We shall provide you intimation regarding launching of e-version of journal of your stream time to time. This may be utilized in your library for the enrichment of knowledge of your students as well as it can also be helpful for the concerned faculty members.

After nomination of your institution as "Institutional Fellow" and constantly functioning successfully for one year, we can consider giving recognition to your institute to function as Regional/Zonal office on our behalf.
The board can also take up the additional allied activities for betterment after our consultation.

The following entitlements are applicable to individual Fellows:

Open Association of Research Society, U.S.A (OARS) By-laws states that an individual Fellow may use the designations as applicable, or the corresponding initials. The Credentials of individual Fellow and Associate designations signify that the individual has gained knowledge of the fundamental concepts. One is magnanimous and proficient in an expertise course covering the professional code of conduct, and follows recognized standards of practice.

Open Association of Research Society (US)/ Global Journals Incorporation (USA), as described in Corporate Statements, are educational, research publishing and professional membership organizations. Achieving our individual Fellow or Associate status is based mainly on meeting stated educational research requirements.

Disbursement of 40% Royalty earned through Global Journals : Researcher = 50%, Peer Reviewer = 37.50%, Institution = 12.50% E.g. Out of 40%, the 20% benefit should be passed on to researcher, 15 % benefit towards remuneration should be given to a reviewer and remaining 5% is to be retained by the institution.

We shall provide print version of 12 issues of any three journals [as per your requirement] out of our 38 journals worth $ 2376 USD.

Other:

The individual Fellow and Associate designations accredited by Open Association of Research Society (US) credentials signify guarantees following achievements:

- The professional accredited with Fellow honor, is entitled to various benefits viz. name, fame, honor, regular flow of income, secured bright future, social status etc.

- In addition to above, if one is single author, then entitled to 40% discount on publishing research paper and can get 10%discount if one is co-author or main author among group of authors.
- The Fellow can organize symposium/seminar/conference on behalf of Global Journals Incorporation (USA) and he/she can also attend the same organized by other institutes on behalf of Global Journals.
- The Fellow can become member of Editorial Board Member after completing 3yrs.
- The Fellow can earn 60% of sales proceeds from the sale of reference/review books/literature/publishing of research paper.
- Fellow can also join as paid peer reviewer and earn 15% remuneration of author charges and can also get an opportunity to join as member of the Editorial Board of Global Journals Incorporation (USA)
- • This individual has learned the basic methods of applying those concepts and techniques to common challenging situations. This individual has further demonstrated an in–depth understanding of the application of suitable techniques to a particular area of research practice.

Note :

"

- In future, if the board feels the necessity to change any board member, the same can be done with the consent of the chairperson along with anyone board member without our approval.
- In case, the chairperson needs to be replaced then consent of 2/3rd board members are required and they are also required to jointly pass the resolution copy of which should be sent to us. In such case, it will be compulsory to obtain our approval before replacement.
- In case of "Difference of Opinion [if any]" among the Board members, our decision will be final and binding to everyone. "

Process of submission of Research Paper

The Area or field of specialization may or may not be of any category as mentioned in 'Scope of Journal' menu of the GlobalJournals.org website. There are 37 Research Journal categorized with Six parental Journals GJCST, GJMR, GJRE, GJMBR, GJSFR, GJHSS. For Authors should prefer the mentioned categories. There are three widely used systems UDC, DDC and LCC. The details are available as 'Knowledge Abstract' at Home page. The major advantage of this coding is that, the research work will be exposed to and shared with all over the world as we are being abstracted and indexed worldwide.

The paper should be in proper format. The format can be downloaded from first page of 'Author Guideline' Menu. The Author is expected to follow the general rules as mentioned in this menu. The paper should be written in MS-Word Format (*.DOC,*.DOCX).

The Author can submit the paper either online or offline. The authors should prefer online submission.Online Submission: There are three ways to submit your paper:

(A) (I) First, register yourself using top right corner of Home page then Login. If you are already registered, then login using your username and password.

(II) Choose corresponding Journal.

(III) Click 'Submit Manuscript'. Fill required information and Upload the paper.

(B) If you are using Internet Explorer, then Direct Submission through Homepage is also available.

(C) If these two are not conveninet , and then email the paper directly to dean@globaljournals.org.

Offline Submission: Author can send the typed form of paper by Post. However, online submission should be preferred.

Preferred Author Guidelines

MANUSCRIPT STYLE INSTRUCTION (Must be strictly followed)

Page Size: 8.27" X 11'"

- Left Margin: 0.65
- Right Margin: 0.65
- Top Margin: 0.75
- Bottom Margin: 0.75
- Font type of all text should be Swis 721 Lt BT.
- Paper Title should be of Font Size 24 with one Column section.
- Author Name in Font Size of 11 with one column as of Title.
- Abstract Font size of 9 Bold, "Abstract" word in Italic Bold.
- Main Text: Font size 10 with justified two columns section
- Two Column with Equal Column with of 3.38 and Gaping of .2
- First Character must be three lines Drop capped.
- Paragraph before Spacing of 1 pt and After of 0 pt.
- Line Spacing of 1 pt
- Large Images must be in One Column
- Numbering of First Main Headings (Heading 1) must be in Roman Letters, Capital Letter, and Font Size of 10.
- Numbering of Second Main Headings (Heading 2) must be in Alphabets, Italic, and Font Size of 10.

You can use your own standard format also.
Author Guidelines:

1. General,

2. Ethical Guidelines,

3. Submission of Manuscripts,

4. Manuscript's Category,

5. Structure and Format of Manuscript,

6. After Acceptance.

1. GENERAL

Before submitting your research paper, one is advised to go through the details as mentioned in following heads. It will be beneficial, while peer reviewer justify your paper for publication.

Scope

The Global Journals Inc. (US) welcome the submission of original paper, review paper, survey article relevant to the all the streams of Philosophy and knowledge. The Global Journals Inc. (US) is parental platform for Global Journal of Computer Science and Technology, Researches in Engineering, Medical Research, Science Frontier Research, Human Social Science, Management, and Business organization. The choice of specific field can be done otherwise as following in Abstracting and Indexing Page on this Website. As the all Global

Journals Inc. (US) are being abstracted and indexed (in process) by most of the reputed organizations. Topics of only narrow interest will not be accepted unless they have wider potential or consequences.

2. ETHICAL GUIDELINES

Authors should follow the ethical guidelines as mentioned below for publication of research paper and research activities.

Papers are accepted on strict understanding that the material in whole or in part has not been, nor is being, considered for publication elsewhere. If the paper once accepted by Global Journals Inc. (US) and Editorial Board, will become the copyright of the Global Journals Inc. (US).

Authorship: The authors and coauthors should have active contribution to conception design, analysis and interpretation of findings. They should critically review the contents and drafting of the paper. All should approve the final version of the paper before submission

The Global Journals Inc. (US) follows the definition of authorship set up by the Global Academy of Research and Development. According to the Global Academy of R&D authorship, criteria must be based on:

1) Substantial contributions to conception and acquisition of data, analysis and interpretation of the findings.

2) Drafting the paper and revising it critically regarding important academic content.

3) Final approval of the version of the paper to be published.

All authors should have been credited according to their appropriate contribution in research activity and preparing paper. Contributors who do not match the criteria as authors may be mentioned under Acknowledgement.

Acknowledgements: Contributors to the research other than authors credited should be mentioned under acknowledgement. The specifications of the source of funding for the research if appropriate can be included. Suppliers of resources may be mentioned along with address.

Appeal of Decision: The Editorial Board's decision on publication of the paper is final and cannot be appealed elsewhere.

Permissions: It is the author's responsibility to have prior permission if all or parts of earlier published illustrations are used in this paper.

Please mention proper reference and appropriate acknowledgements wherever expected.

If all or parts of previously published illustrations are used, permission must be taken from the copyright holder concerned. It is the author's responsibility to take these in writing.

Approval for reproduction/modification of any information (including figures and tables) published elsewhere must be obtained by the authors/copyright holders before submission of the manuscript. Contributors (Authors) are responsible for any copyright fee involved.

3. SUBMISSION OF MANUSCRIPTS

Manuscripts should be uploaded via this online submission page. The online submission is most efficient method for submission of papers, as it enables rapid distribution of manuscripts and consequently speeds up the review procedure. It also enables authors to know the status of their own manuscripts by emailing us. Complete instructions for submitting a paper is available below.

Manuscript submission is a systematic procedure and little preparation is required beyond having all parts of your manuscript in a given format and a computer with an Internet connection and a Web browser. Full help and instructions are provided on-screen. As an author, you will be prompted for login and manuscript details as Field of Paper and then to upload your manuscript file(s) according to the instructions.

To avoid postal delays, all transaction is preferred by e-mail. A finished manuscript submission is confirmed by e-mail immediately and your paper enters the editorial process with no postal delays. When a conclusion is made about the publication of your paper by our Editorial Board, revisions can be submitted online with the same procedure, with an occasion to view and respond to all comments.

Complete support for both authors and co-author is provided.

4. MANUSCRIPT'S CATEGORY

Based on potential and nature, the manuscript can be categorized under the following heads:

Original research paper: Such papers are reports of high-level significant original research work.

Review papers: These are concise, significant but helpful and decisive topics for young researchers.

Research articles: These are handled with small investigation and applications

Research letters: The letters are small and concise comments on previously published matters.

5.STRUCTURE AND FORMAT OF MANUSCRIPT

The recommended size of original research paper is less than seven thousand words, review papers fewer than seven thousands words also.Preparation of research paper or how to write research paper, are major hurdle, while writing manuscript. The research articles and research letters should be fewer than three thousand words, the structure original research paper; sometime review paper should be as follows:

Papers: These are reports of significant research (typically less than 7000 words equivalent, including tables, figures, references), and comprise:

(a)Title should be relevant and commensurate with the theme of the paper.

(b) A brief Summary, "Abstract" (less than 150 words) containing the major results and conclusions.

(c) Up to ten keywords, that precisely identifies the paper's subject, purpose, and focus.

(d) An Introduction, giving necessary background excluding subheadings; objectives must be clearly declared.

(e) Resources and techniques with sufficient complete experimental details (wherever possible by reference) to permit repetition; sources of information must be given and numerical methods must be specified by reference, unless non-standard.

(f) Results should be presented concisely, by well-designed tables and/or figures; the same data may not be used in both; suitable statistical data should be given. All data must be obtained with attention to numerical detail in the planning stage. As reproduced design has been recognized to be important to experiments for a considerable time, the Editor has decided that any paper that appears not to have adequate numerical treatments of the data will be returned un-refereed;

(g) Discussion should cover the implications and consequences, not just recapitulating the results; conclusions should be summarizing.

(h) Brief Acknowledgements.

(i) References in the proper form.

Authors should very cautiously consider the preparation of papers to ensure that they communicate efficiently. Papers are much more likely to be accepted, if they are cautiously designed and laid out, contain few or no errors, are summarizing, and be conventional to the approach and instructions. They will in addition, be published with much less delays than those that require much technical and editorial correction.

The Editorial Board reserves the right to make literary corrections and to make suggestions to improve briefness.

It is vital, that authors take care in submitting a manuscript that is written in simple language and adheres to published guidelines.

Format

Language: The language of publication is UK English. Authors, for whom English is a second language, must have their manuscript efficiently edited by an English-speaking person before submission to make sure that, the English is of high excellence. It is preferable, that manuscripts should be professionally edited.

Standard Usage, Abbreviations, and Units: Spelling and hyphenation should be conventional to The Concise Oxford English Dictionary. Statistics and measurements should at all times be given in figures, e.g. 16 min, except for when the number begins a sentence. When the number does not refer to a unit of measurement it should be spelt in full unless, it is 160 or greater.

Abbreviations supposed to be used carefully. The abbreviated name or expression is supposed to be cited in full at first usage, followed by the conventional abbreviation in parentheses.

Metric SI units are supposed to generally be used excluding where they conflict with current practice or are confusing. For illustration, 1.4 l rather than 1.4 × 10-3 m3, or 4 mm somewhat than 4 × 10-3 m. Chemical formula and solutions must identify the form used, e.g. anhydrous or hydrated, and the concentration must be in clearly defined units. Common species names should be followed by underlines at the first mention. For following use the generic name should be constricted to a single letter, if it is clear.

Structure

All manuscripts submitted to Global Journals Inc. (US), ought to include:

Title: The title page must carry an instructive title that reflects the content, a running title (less than 45 characters together with spaces), names of the authors and co-authors, and the place(s) wherever the work was carried out. The full postal address in addition with the e-mail address of related author must be given. Up to eleven keywords or very brief phrases have to be given to help data retrieval, mining and indexing.

Abstract, used in Original Papers and Reviews:

Optimizing Abstract for Search Engines

Many researchers searching for information online will use search engines such as Google, Yahoo or similar. By optimizing your paper for search engines, you will amplify the chance of someone finding it. This in turn will make it more likely to be viewed and/or cited in a further work. Global Journals Inc. (US) have compiled these guidelines to facilitate you to maximize the web-friendliness of the most public part of your paper.

Key Words

A major linchpin in research work for the writing research paper is the keyword search, which one will employ to find both library and Internet resources.

One must be persistent and creative in using keywords. An effective keyword search requires a strategy and planning a list of possible keywords and phrases to try.

Search engines for most searches, use Boolean searching, which is somewhat different from Internet searches. The Boolean search uses "operators," words (and, or, not, and near) that enable you to expand or narrow your affords. Tips for research paper while preparing research paper are very helpful guideline of research paper.

Choice of key words is first tool of tips to write research paper. Research paper writing is an art.A few tips for deciding as strategically as possible about keyword search:

- One should start brainstorming lists of possible keywords before even begin searching. Think about the most important concepts related to research work. Ask, "What words would a source have to include to be truly valuable in research paper?" Then consider synonyms for the important words.
- It may take the discovery of only one relevant paper to let steer in the right keyword direction because in most databases, the keywords under which a research paper is abstracted are listed with the paper.
- One should avoid outdated words.

Keywords are the key that opens a door to research work sources. Keyword searching is an art in which researcher's skills are bound to improve with experience and time.

Numerical Methods: Numerical methods used should be clear and, where appropriate, supported by references.

Acknowledgements: Please make these as concise as possible.

References

References follow the Harvard scheme of referencing. References in the text should cite the authors' names followed by the time of their publication, unless there are three or more authors when simply the first author's name is quoted followed by et al. unpublished work has to only be cited where necessary, and only in the text. Copies of references in press in other journals have to be supplied with submitted typescripts. It is necessary that all citations and references be carefully checked before submission, as mistakes or omissions will cause delays.

References to information on the World Wide Web can be given, but only if the information is available without charge to readers on an official site. Wikipedia and Similar websites are not allowed where anyone can change the information. Authors will be asked to make available electronic copies of the cited information for inclusion on the Global Journals Inc. (US) homepage at the judgment of the Editorial Board.

The Editorial Board and Global Journals Inc. (US) recommend that, citation of online-published papers and other material should be done via a DOI (digital object identifier). If an author cites anything, which does not have a DOI, they run the risk of the cited material not being noticeable.

The Editorial Board and Global Journals Inc. (US) recommend the use of a tool such as Reference Manager for reference management and formatting.

Tables, Figures and Figure Legends

Tables: Tables should be few in number, cautiously designed, uncrowned, and include only essential data. Each must have an Arabic number, e.g. Table 4, a self-explanatory caption and be on a separate sheet. Vertical lines should not be used.

Figures: Figures are supposed to be submitted as separate files. Always take in a citation in the text for each figure using Arabic numbers, e.g. Fig. 4. Artwork must be submitted online in electronic form by e-mailing them.

Preparation of Electronic Figures for Publication

Even though low quality images are sufficient for review purposes, print publication requires high quality images to prevent the final product being blurred or fuzzy. Submit (or e-mail) EPS (line art) or TIFF (halftone/photographs) files only. MS PowerPoint and Word Graphics are unsuitable for printed pictures. Do not use pixel-oriented software. Scans (TIFF only) should have a resolution of at least 350 dpi (halftone) or 700 to 1100 dpi (line drawings) in relation to the imitation size. Please give the data for figures in black and white or submit a Color Work Agreement Form. EPS files must be saved with fonts embedded (and with a TIFF preview, if possible).

For scanned images, the scanning resolution (at final image size) ought to be as follows to ensure good reproduction: line art: >650 dpi; halftones (including gel photographs) : >350 dpi; figures containing both halftone and line images: >650 dpi.

Color Charges: It is the rule of the Global Journals Inc. (US) for authors to pay the full cost for the reproduction of their color artwork. Hence, please note that, if there is color artwork in your manuscript when it is accepted for publication, we would require you to complete and return a color work agreement form before your paper can be published.

Figure Legends: Self-explanatory legends of all figures should be incorporated separately under the heading 'Legends to Figures'. In the full-text online edition of the journal, figure legends may possibly be truncated in abbreviated links to the full screen version. Therefore, the first 100 characters of any legend should notify the reader, about the key aspects of the figure.

6. AFTER ACCEPTANCE

Upon approval of a paper for publication, the manuscript will be forwarded to the dean, who is responsible for the publication of the Global Journals Inc. (US).

6.1 Proof Corrections

The corresponding author will receive an e-mail alert containing a link to a website or will be attached. A working e-mail address must therefore be provided for the related author.

Acrobat Reader will be required in order to read this file. This software can be downloaded

(Free of charge) from the following website:

www.adobe.com/products/acrobat/readstep2.html. This will facilitate the file to be opened, read on screen, and printed out in order for any corrections to be added. Further instructions will be sent with the proof.

Proofs must be returned to the dean at dean@globaljournals.org within three days of receipt.

As changes to proofs are costly, we inquire that you only correct typesetting errors. All illustrations are retained by the publisher. Please note that the authors are responsible for all statements made in their work, including changes made by the copy editor.

6.2 Early View of Global Journals Inc. (US) (Publication Prior to Print)

The Global Journals Inc. (US) are enclosed by our publishing's Early View service. Early View articles are complete full-text articles sent in advance of their publication. Early View articles are absolute and final. They have been completely reviewed, revised and edited for publication, and the authors' final corrections have been incorporated. Because they are in final form, no changes can be made after sending them. The nature of Early View articles means that they do not yet have volume, issue or page numbers, so Early View articles cannot be cited in the conventional way.

6.3 Author Services

Online production tracking is available for your article through Author Services. Author Services enables authors to track their article - once it has been accepted - through the production process to publication online and in print. Authors can check the status of their articles online and choose to receive automated e-mails at key stages of production. The authors will receive an e-mail with a unique link that enables them to register and have their article automatically added to the system. Please ensure that a complete e-mail address is provided when submitting the manuscript.

6.4 Author Material Archive Policy

Please note that if not specifically requested, publisher will dispose off hardcopy & electronic information submitted, after the two months of publication. If you require the return of any information submitted, please inform the Editorial Board or dean as soon as possible.

6.5 Offprint and Extra Copies

A PDF offprint of the online-published article will be provided free of charge to the related author, and may be distributed according to the Publisher's terms and conditions. Additional paper offprint may be ordered by emailing us at: editor@globaljournals.org .

Before start writing a good quality Computer Science Research Paper, let us first understand what is Computer Science Research Paper? So, Computer Science Research Paper is the paper which is written by professionals or scientists who are associated to Computer Science and Information Technology, or doing research study in these areas. If you are novel to this field then you can consult about this field from your supervisor or guide.

TECHNIQUES FOR WRITING A GOOD QUALITY RESEARCH PAPER:

1. Choosing the topic: In most cases, the topic is searched by the interest of author but it can be also suggested by the guides. You can have several topics and then you can judge that in which topic or subject you are finding yourself most comfortable. This can be done by asking several questions to yourself, like Will I be able to carry our search in this area? Will I find all necessary recourses to accomplish the search? Will I be able to find all information in this field area? If the answer of these types of questions will be "Yes" then you can choose that topic. In most of the cases, you may have to conduct the surveys and have to visit several places because this field is related to Computer Science and Information Technology. Also, you may have to do a lot of work to find all rise and falls regarding the various data of that subject. Sometimes, detailed information plays a vital role, instead of short information.

2. Evaluators are human: First thing to remember that evaluators are also human being. They are not only meant for rejecting a paper. They are here to evaluate your paper. So, present your Best.

3. Think Like Evaluators: If you are in a confusion or getting demotivated that your paper will be accepted by evaluators or not, then think and try to evaluate your paper like an Evaluator. Try to understand that what an evaluator wants in your research paper and automatically you will have your answer.

4. Make blueprints of paper: The outline is the plan or framework that will help you to arrange your thoughts. It will make your paper logical. But remember that all points of your outline must be related to the topic you have chosen.

5. Ask your Guides: If you are having any difficulty in your research, then do not hesitate to share your difficulty to your guide (if you have any). They will surely help you out and resolve your doubts. If you can't clarify what exactly you require for your work then ask the supervisor to help you with the alternative. He might also provide you the list of essential readings.

6. Use of computer is recommended: As you are doing research in the field of Computer Science, then this point is quite obvious.

7. Use right software: Always use good quality software packages. If you are not capable to judge good software then you can lose quality of your paper unknowingly. There are various software programs available to help you, which you can get through Internet.

8. Use the Internet for help: An excellent start for your paper can be by using the Google. It is an excellent search engine, where you can have your doubts resolved. You may also read some answers for the frequent question how to write my research paper or find model research paper. From the internet library you can download books. If you have all required books make important reading selecting and analyzing the specified information. Then put together research paper sketch out.

9. Use and get big pictures: Always use encyclopedias, Wikipedia to get pictures so that you can go into the depth.

10. Bookmarks are useful: When you read any book or magazine, you generally use bookmarks, right! It is a good habit, which helps to not to lose your continuity. You should always use bookmarks while searching on Internet also, which will make your search easier.

11. Revise what you wrote: When you write anything, always read it, summarize it and then finalize it.

12. Make all efforts: Make all efforts to mention what you are going to write in your paper. That means always have a good start. Try to mention everything in introduction, that what is the need of a particular research paper. Polish your work by good skill of writing and always give an evaluator, what he wants.

13. Have backups: When you are going to do any important thing like making research paper, you should always have backup copies of it either in your computer or in paper. This will help you to not to lose any of your important.

14. Produce good diagrams of your own: Always try to include good charts or diagrams in your paper to improve quality. Using several and unnecessary diagrams will degrade the quality of your paper by creating "hotchpotch." So always, try to make and include those diagrams, which are made by your own to improve readability and understandability of your paper.

15. Use of direct quotes: When you do research relevant to literature, history or current affairs then use of quotes become essential but if study is relevant to science then use of quotes is not preferable.

16. Use proper verb tense: Use proper verb tenses in your paper. Use past tense, to present those events that happened. Use present tense to indicate events that are going on. Use future tense to indicate future happening events. Use of improper and wrong tenses will confuse the evaluator. Avoid the sentences that are incomplete.

17. Never use online paper: If you are getting any paper on Internet, then never use it as your research paper because it might be possible that evaluator has already seen it or maybe it is outdated version.

18. Pick a good study spot: To do your research studies always try to pick a spot, which is quiet. Every spot is not for studies. Spot that suits you choose it and proceed further.

19. Know what you know: Always try to know, what you know by making objectives. Else, you will be confused and cannot achieve your target.

20. Use good quality grammar: Always use a good quality grammar and use words that will throw positive impact on evaluator. Use of good quality grammar does not mean to use tough words, that for each word the evaluator has to go through dictionary. Do not start sentence with a conjunction. Do not fragment sentences. Eliminate one-word sentences. Ignore passive voice. Do not ever use a big word when a diminutive one would suffice. Verbs have to be in agreement with their subjects. Prepositions are not expressions to finish sentences with. It is incorrect to ever divide an infinitive. Avoid clichés like the disease. Also, always shun irritating alliteration. Use language that is simple and straight forward. put together a neat summary.

21. Arrangement of information: Each section of the main body should start with an opening sentence and there should be a changeover at the end of the section. Give only valid and powerful arguments to your topic. You may also maintain your arguments with records.

22. Never start in last minute: Always start at right time and give enough time to research work. Leaving everything to the last minute will degrade your paper and spoil your work.

23. Multitasking in research is not good: Doing several things at the same time proves bad habit in case of research activity. Research is an area, where everything has a particular time slot. Divide your research work in parts and do particular part in particular time slot.

24. Never copy others' work: Never copy others' work and give it your name because if evaluator has seen it anywhere you will be in trouble.

25. Take proper rest and food: No matter how many hours you spend for your research activity, if you are not taking care of your health then all your efforts will be in vain. For a quality research, study is must, and this can be done by taking proper rest and food.

26. Go for seminars: Attend seminars if the topic is relevant to your research area. Utilize all your resources.

27. Refresh your mind after intervals: Try to give rest to your mind by listening to soft music or by sleeping in intervals. This will also improve your memory.

28. Make colleagues: Always try to make colleagues. No matter how sharper or intelligent you are, if you make colleagues you can have several ideas, which will be helpful for your research.

29. Think technically: Always think technically. If anything happens, then search its reasons, its benefits, and demerits.

30. Think and then print: When you will go to print your paper, notice that tables are not be split, headings are not detached from their descriptions, and page sequence is maintained.

31. Adding unnecessary information: Do not add unnecessary information, like, I have used MS Excel to draw graph. Do not add irrelevant and inappropriate material. These all will create superfluous. Foreign terminology and phrases are not apropos. One should NEVER take a broad view. Analogy in script is like feathers on a snake. Not at all use a large word when a very small one would be sufficient. Use words properly, regardless of how others use them. Remove quotations. Puns are for kids, not grunt readers. Amplification is a billion times of inferior quality than sarcasm.

32. Never oversimplify everything: To add material in your research paper, never go for oversimplification. This will definitely irritate the evaluator. Be more or less specific. Also too, by no means, ever use rhythmic redundancies. Contractions aren't essential and shouldn't be there used. Comparisons are as terrible as clichés. Give up ampersands and abbreviations, and so on. Remove commas, that are, not necessary. Parenthetical words however should be together with this in commas. Understatement is all the time the complete best way to put onward earth-shaking thoughts. Give a detailed literary review.

33. Report concluded results: Use concluded results. From raw data, filter the results and then conclude your studies based on measurements and observations taken. Significant figures and appropriate number of decimal places should be used. Parenthetical remarks are prohibitive. Proofread carefully at final stage. In the end give outline to your arguments. Spot out perspectives of further study of this subject. Justify your conclusion by at the bottom of them with sufficient justifications and examples.

34. After conclusion: Once you have concluded your research, the next most important step is to present your findings. Presentation is extremely important as it is the definite medium though which your research is going to be in print to the rest of the crowd. Care should be taken to categorize your thoughts well and present them in a logical and neat manner. A good quality research paper format is essential because it serves to highlight your research paper and bring to light all necessary aspects in your research.

Informal Guidelines of Research Paper Writing

Key points to remember:

- Submit all work in its final form.
- Write your paper in the form, which is presented in the guidelines using the template.
- Please note the criterion for grading the final paper by peer-reviewers.

Final Points:

A purpose of organizing a research paper is to let people to interpret your effort selectively. The journal requires the following sections, submitted in the order listed, each section to start on a new page.

The introduction will be compiled from reference matter and will reflect the design processes or outline of basis that direct you to make study. As you will carry out the process of study, the method and process section will be constructed as like that. The result segment will show related statistics in nearly sequential order and will direct the reviewers next to the similar intellectual paths throughout the data that you took to carry out your study. The discussion section will provide understanding of the data and projections as to the implication of the results. The use of good quality references all through the paper will give the effort trustworthiness by representing an alertness of prior workings.

Writing a research paper is not an easy job no matter how trouble-free the actual research or concept. Practice, excellent preparation, and controlled record keeping are the only means to make straightforward the progression.

General style:

Specific editorial column necessities for compliance of a manuscript will always take over from directions in these general guidelines.

To make a paper clear

· Adhere to recommended page limits

Mistakes to evade

- Insertion a title at the foot of a page with the subsequent text on the next page
- Separating a table/chart or figure - impound each figure/table to a single page
- Submitting a manuscript with pages out of sequence

In every sections of your document

· Use standard writing style including articles ("a", "the," etc.)

· Keep on paying attention on the research topic of the paper

· Use paragraphs to split each significant point (excluding for the abstract)

· Align the primary line of each section

· Present your points in sound order

· Use present tense to report well accepted

· Use past tense to describe specific results

· Shun familiar wording, don't address the reviewer directly, and don't use slang, slang language, or superlatives

· Shun use of extra pictures - include only those figures essential to presenting results

Title Page:

Choose a revealing title. It should be short. It should not have non-standard acronyms or abbreviations. It should not exceed two printed lines. It should include the name(s) and address (es) of all authors.

Abstract:

The summary should be two hundred words or less. It should briefly and clearly explain the key findings reported in the manuscript--must have precise statistics. It should not have abnormal acronyms or abbreviations. It should be logical in itself. Shun citing references at this point.

An abstract is a brief distinct paragraph summary of finished work or work in development. In a minute or less a reviewer can be taught the foundation behind the study, common approach to the problem, relevant results, and significant conclusions or new questions.

Write your summary when your paper is completed because how can you write the summary of anything which is not yet written? Wealth of terminology is very essential in abstract. Yet, use comprehensive sentences and do not let go readability for briefness. You can maintain it succinct by phrasing sentences so that they provide more than lone rationale. The author can at this moment go straight to shortening the outcome. Sum up the study, with the subsequent elements in any summary. Try to maintain the initial two items to no more than one ruling each.

- Reason of the study - theory, overall issue, purpose
- Fundamental goal
- To the point depiction of the research
- Consequences, including definite statistics - if the consequences are quantitative in nature, account quantitative data; results of any numerical analysis should be reported
- Significant conclusions or questions that track from the research(es)

Approach:

- Single section, and succinct
- As a outline of job done, it is always written in past tense
- A conceptual should situate on its own, and not submit to any other part of the paper such as a form or table
- Center on shortening results - bound background information to a verdict or two, if completely necessary
- What you account in an conceptual must be regular with what you reported in the manuscript
- Exact spelling, clearness of sentences and phrases, and appropriate reporting of quantities (proper units, important statistics) are just as significant in an abstract as they are anywhere else

Introduction:

The **Introduction** should "introduce" the manuscript. The reviewer should be presented with sufficient background information to be capable to comprehend and calculate the purpose of your study without having to submit to other works. The basis for the study should be offered. Give most important references but shun difficult to make a comprehensive appraisal of the topic. In the introduction, describe the problem visibly. If the problem is not acknowledged in a logical, reasonable way, the reviewer will have no attention in your result. Speak in common terms about techniques used to explain the problem, if needed, but do not present any particulars about the protocols here. Following approach can create a valuable beginning:

- Explain the value (significance) of the study
- Shield the model - why did you employ this particular system or method? What is its compensation? You strength remark on its appropriateness from a abstract point of vision as well as point out sensible reasons for using it.
- Present a justification. Status your particular theory (es) or aim(s), and describe the logic that led you to choose them.
- Very for a short time explain the tentative propose and how it skilled the declared objectives.

Approach:

- Use past tense except for when referring to recognized facts. After all, the manuscript will be submitted after the entire job is done.
- Sort out your thoughts; manufacture one key point with every section. If you make the four points listed above, you will need a least of four paragraphs.

- Present surroundings information only as desirable in order hold up a situation. The reviewer does not desire to read the whole thing you know about a topic.
- Shape the theory/purpose specifically - do not take a broad view.
- As always, give awareness to spelling, simplicity and correctness of sentences and phrases.

Procedures (Methods and Materials):

This part is supposed to be the easiest to carve if you have good skills. A sound written Procedures segment allows a capable scientist to replacement your results. Present precise information about your supplies. The suppliers and clarity of reagents can be helpful bits of information. Present methods in sequential order but linked methodologies can be grouped as a segment. Be concise when relating the protocols. Attempt for the least amount of information that would permit another capable scientist to spare your outcome but be cautious that vital information is integrated. The use of subheadings is suggested and ought to be synchronized with the results section. When a technique is used that has been well described in another object, mention the specific item describing a way but draw the basic principle while stating the situation. The purpose is to text all particular resources and broad procedures, so that another person may use some or all of the methods in one more study or referee the scientific value of your work. It is not to be a step by step report of the whole thing you did, nor is a methods section a set of orders.

Materials:

- Explain materials individually only if the study is so complex that it saves liberty this way.
- Embrace particular materials, and any tools or provisions that are not frequently found in laboratories.
- Do not take in frequently found.
- If use of a definite type of tools.
- Materials may be reported in a part section or else they may be recognized along with your measures.

Methods:

- Report the method (not particulars of each process that engaged the same methodology)
- Describe the method entirely
- To be succinct, present methods under headings dedicated to specific dealings or groups of measures
- Simplify - details how procedures were completed not how they were exclusively performed on a particular day.
- If well known procedures were used, account the procedure by name, possibly with reference, and that's all.

Approach:

- It is embarrassed or not possible to use vigorous voice when documenting methods with no using first person, which would focus the reviewer's interest on the researcher rather than the job. As a result when script up the methods most authors use third person passive voice.
- Use standard style in this and in every other part of the paper - avoid familiar lists, and use full sentences.

What to keep away from

- Resources and methods are not a set of information.
- Skip all descriptive information and surroundings - save it for the argument.
- Leave out information that is immaterial to a third party.

Results:

The principle of a results segment is to present and demonstrate your conclusion. Create this part a entirely objective details of the outcome, and save all understanding for the discussion.

The page length of this segment is set by the sum and types of data to be reported. Carry on to be to the point, by means of statistics and tables, if suitable, to present consequences most efficiently.You must obviously differentiate material that would usually be incorporated in a study editorial from any unprocessed data or additional appendix matter that would not be available. In fact, such matter should not be submitted at all except requested by the instructor.

Content

- Sum up your conclusion in text and demonstrate them, if suitable, with figures and tables.
- In manuscript, explain each of your consequences, point the reader to remarks that are most appropriate.
- Present a background, such as by describing the question that was addressed by creation an exacting study.
- Explain results of control experiments and comprise remarks that are not accessible in a prescribed figure or table, if appropriate.
- Examine your data, then prepare the analyzed (transformed) data in the form of a figure (graph), table, or in manuscript form.

What to stay away from

- Do not discuss or infer your outcome, report surroundings information, or try to explain anything.
- Not at all, take in raw data or intermediate calculations in a research manuscript.
- Do not present the similar data more than once.
- Manuscript should complement any figures or tables, not duplicate the identical information.
- Never confuse figures with tables - there is a difference.

Approach

- As forever, use past tense when you submit to your results, and put the whole thing in a reasonable order.
- Put figures and tables, appropriately numbered, in order at the end of the report
- If you desire, you may place your figures and tables properly within the text of your results part.

Figures and tables

- If you put figures and tables at the end of the details, make certain that they are visibly distinguished from any attach appendix materials, such as raw facts
- Despite of position, each figure must be numbered one after the other and complete with subtitle
- In spite of position, each table must be titled, numbered one after the other and complete with heading
- All figure and table must be adequately complete that it could situate on its own, divide from text

Discussion:

The Discussion is expected the trickiest segment to write and describe. A lot of papers submitted for journal are discarded based on problems with the Discussion. There is no head of state for how long a argument should be. Position your understanding of the outcome visibly to lead the reviewer through your conclusions, and then finish the paper with a summing up of the implication of the study. The purpose here is to offer an understanding of your results and hold up for all of your conclusions, using facts from your research and generally accepted information, if suitable. The implication of result should be visibly described. Infer your data in the conversation in suitable depth. This means that when you clarify an observable fact you must explain mechanisms that may account for the observation. If your results vary from your prospect, make clear why that may have happened. If your results agree, then explain the theory that the proof supported. It is never suitable to just state that the data approved with prospect, and let it drop at that.

- Make a decision if each premise is supported, discarded, or if you cannot make a conclusion with assurance. Do not just dismiss a study or part of a study as "uncertain."
- Research papers are not acknowledged if the work is imperfect. Draw what conclusions you can based upon the results that you have, and take care of the study as a finished work
- You may propose future guidelines, such as how the experiment might be personalized to accomplish a new idea.
- Give details all of your remarks as much as possible, focus on mechanisms.
- Make a decision if the tentative design sufficiently addressed the theory, and whether or not it was correctly restricted.
- Try to present substitute explanations if sensible alternatives be present.
- One research will not counter an overall question, so maintain the large picture in mind, where do you go next? The best studies unlock new avenues of study. What questions remain?
- Recommendations for detailed papers will offer supplementary suggestions.

Approach:

- When you refer to information, differentiate data generated by your own studies from available information
- Submit to work done by specific persons (including you) in past tense.
- Submit to generally acknowledged facts and main beliefs in present tense.

The Administration Rules

Please carefully note down following rules and regulation before submitting your Research Paper to Global Journals Inc. (US):

Segment Draft and Final Research Paper: You have to strictly follow the template of research paper. If it is not done your paper may get rejected.

- The **major constraint** is that you must independently make all content, tables, graphs, and facts that are offered in the paper. You must write each part of the paper wholly on your own. The Peer-reviewers need to identify your own perceptive of the concepts in your own terms. NEVER extract straight from any foundation, and never rephrase someone else's analysis.

- Do not give permission to anyone else to "PROOFREAD" your manuscript.

- Methods to avoid Plagiarism is applied by us on every paper, if found guilty, you will be blacklisted by all of our collaborated research groups, your institution will be informed for this and strict legal actions will be taken immediately.)
- To guard yourself and others from possible illegal use please do not permit anyone right to use to your paper and files.

Criterion for Grading a Research Paper (Compilation) by Global Journals Inc. (US)

Please note that following table is only a Grading of "Paper Compilation" and not on "Performed/Stated Research" whose grading solely depends on Individual Assigned Peer Reviewer and Editorial Board Member. These can be available only on request and after decision of Paper. This report will be the property of Global Journals Inc. (US).

Topics	Grades		
	A-B	**C-D**	**E-F**
Abstract	Clear and concise with appropriate content, Correct format. 200 words or below	Unclear summary and no specific data, Incorrect form Above 200 words	No specific data with ambiguous information Above 250 words
Introduction	Containing all background details with clear goal and appropriate details, flow specification, no grammar and spelling mistake, well organized sentence and paragraph, reference cited	Unclear and confusing data, appropriate format, grammar and spelling errors with unorganized matter	Out of place depth and content, hazy format
Methods and Procedures	Clear and to the point with well arranged paragraph, precision and accuracy of facts and figures, well organized subheads	Difficult to comprehend with embarrassed text, too much explanation but completed	Incorrect and unorganized structure with hazy meaning
Result	Well organized, Clear and specific, Correct units with precision, correct data, well structuring of paragraph, no grammar and spelling mistake	Complete and embarrassed text, difficult to comprehend	Irregular format with wrong facts and figures
Discussion	Well organized, meaningful specification, sound conclusion, logical and concise explanation, highly structured paragraph reference cited	Wordy, unclear conclusion, spurious	Conclusion is not cited, unorganized, difficult to comprehend
References	Complete and correct format, well organized	Beside the point, Incomplete	Wrong format and structuring

Index

A

Abattoir · 39
Acalypha · 57, 58, 59,

C

Ciprofloxacin · 34, 35, 36, 37, 38
Coagulase · 34, 38, 39, 40

D

Debilitating · 57

F

Friesian · 13, 14, 15, 17

M

Mastitis · 13, 14, 18, 19, 20
Mating · 1, 2, 5, 6, 24, 30

O

Oestrus · 2
Ornamental · 57

P

Prophylactic · 39
Pulverized · 58

W

Wilkesiana · 57
Wolaita · 13, 14, 15, 41

save our planet

Global Journal of Science Frontier Research

Visit us on the Web at www.GlobalJournals.org | www.JournalofScience.org
or email us at helpdesk@globaljournals.org

ISSN 9755896

© Global Journals